LONG ISLAND Sinclair TIMEX GROUP

L.I.S.T.ING

February 1986

Issue Price $1.50

MEETING NOTES - January 1986

The January LIST meeting was held at the Huntington Public Library at 2PM. There were 24 members in attendance. Paul D. reported that as of January 12th:

LIST has had 133 members at one time or another - Current membership stands at 122 - As of the beginning of the meeting, 60 members are paid up past February 1. (By the end of the meeting, there were 70). - Current treasury balance is $693.84 which should be sufficient to maintain operations at existing levels, for the coming year.

Paul mentioned that some exchange user groups have a library tape and have expressed an interest in trading. This was well received and Martin Helfgott volunteered to write to the likely choices. Paul was asked some questions about library type versions, they are covered in the newsletters.

Chuck Russell, our new president, was then installed and continued the conduct of the meeting. Nazir P. suggested that other computers be demoed at the meeting. There were pros and cons discussed and the general concensus seemed that it would do no harm.

Chuck suggested meeting themes, rather than the "free-for-all" style of past meetings. Members requested the following:

Machine Code Programming
"Other" languages (Forth, PASCAL, C, LISP, LOGO etc)
BASIC Programming (Beginners, Intermediate, advanced)
Disk drives (the 5 popular systems)
Hardware Breakers (e.g., Interface III, Magic Button)
Printers (full size)
Sound & Beep (use of the sound chip)
Artificial Interligence
MODEMS (communications, BBS's)
Interfacing (A/D & D to A converters, controll of external devices etc.
Voice Recognition & Synthesis
Graphics

In addition to the main theme or presentation, miscellaneous items would still be brought to the members attention as they occur. This is particularly true of news items (e.g., Gavilan printer, cheap Modems), Next months main theme will be:

PRINTERS

If you have a printer that you'd like to work better with your TS printer, bring it. Bob G. has interfaced a number of printers and will have serial and parallel interfaces available. Bob mentioned that he has even hooked up his Silver Reed EP-400 (Daisywheel) to do graphics.

Andy G. urged local members to make more use of our SIG section on Zebra's BBS. (See below) The board is up and running every weekday from 1730 hours to 0900 hours, all day Saturday and Sunday.

Stewart N. gave us a quick rundown on the Timex 2050 Modem. He noted that Anchor automation originally made some 10,000 2050 boards for Timex, only about 2500 of them were ever "packaged". Westridge communication was chosen by Anchor to market what was left after Timex bailed out. They had been selling off the completed units to vendors like E.A. Brown and Zebra. Recently, they sold the populated boards at auction. These have been picked up by Dave Clifford and others on the West Coast and by Zebra. The boards are essentially complete Modems, but are untested and have no documentation, power supply or software. Clifford is selling them for $25 postpaid, guaranteed. Stewart sold untested boards to members, after the meeting, for under $10.00 each. They sold like hotcakes. (mine works). He noted too, that these boards are simply laid-out single sided and an experimenters delight. There are, for example, two LS138's (which can be re configured for almost any I/O address), an 8251, on board crystal/clock etc. Many of these parts are used in the Scott Foresman Interfacing books (also sold to meeting attendees - at $3 each). He noted that a TS 1000 power supply will run the Modem (though most of the logic chips get their power from the computer). Jeff Street is developing 64 column software for use with the 2050 Modem. Cem B. says he got 5 out of 8 of these 2050 boards working is just a few minutes.

DEMOES

Oliger Disk Drive

Bob G. demoed the Oliger disk drive interface. He used Oligers Mother board (required), disk drive card (about $98) and an enclosed dual drive system in an Aerco case. Bob notes that any Shugart compatible (34 pin) drive will work with Oligers system.

The system is "primitive" in that it copies all of RAM to disk each time it is used. This means you get 8 files per disk. A one-K program takes as much disk space as a full blown game or data base. Bob likes this system in that, with disks costing less than 75¢ in bulk, it provides a convenient storage method for his needs. A heated discussion on the advantages of physical disks versus directories (trees, paths etc.) followed.

SUBSCRIPTION NOTICE

Please check your mailing label. Above your last name you will see the month and year in which you will receive your last issue of LISTing (LLIST) Newsletter. If this number does not agree with your records please let us know

LIST GROUP
P.O. BOX 458
CENTERPORT, N.Y. 11721-0458

SUBJECT	PAGE

Meeting Notes 1
Index 2
Cumulative Index compiled 3
by Heinz Henken 4
"Yes,Virgina"column (Joe King,Computer Living) 5
Additions to Computor Dictionery 5
Vendor Report & Bargain Corner 5
SCLD Comments,etc. by William Pedersen 6
How close is the PI? 6
Letters to L. 7
I. 8
S. 9
T. 10
Alternate Timex Portugal Disk Dive Power Supply
by R. Gilder 11
Disk Drive Control and Interfacing Part 3 12
The Disc Controller by R. Gilder 13
Glossary of keyswitch technologies 13
Keyboard Mania 14
Part 1 15
by C.R. Bastiaans 16
Bank switching the Timex/Sinclair 2068 17
by William Pedersen 18
Turbo Loaders PJD 19
Turbo Loaders,cont'd 20
Hackers Notebook 21
For Your Information... 22
by N.A. Pashtoon 23
Map & Mailer 24

Meeting notes continued:

It is assumed that Ray Kingsley software, if ever produced, or John's own upgrades, will address the needs of the "random access" people. For now, a singular advantage of the "block" copy method is the use of the "magic button" John O. supplies a schematic for a simple NMI circuit which allows you to take a "snapshot" of your computer's state and record it on disk. When reloaded, the program "hits the ground running" right where it left off. This is clearly a must for that uncopyable software you'd like to have on disk. Saving time for 48K is 4 seconds.

The Oliger system supports both 2068 and Spectrum modes and requires no twistor. He found he needed a 100pf capacitor or pin 3 of IC5 for the system to work with his 'dog' machine. Otherwise there were no problems. The board uses the 1770 controller chip. Jeff S. promises OS64 compatibility. He needs to change 2 bytes.

Printer - Gavilan

John Bell demoed his simple "centronics" like interface and the $20 Gavilan thermal transfer printer. The Gavilan is a dot matrix printer and John has developed software to utilize all 220 available characters. Graphics capability is unknown. While no direct source of replacement ribbons has been found yet, John notes that Okimate 10 ribbons can be rewound to fit the Gavilan cartridge.

Final Notes

Myles Cohen requested that more members volunteer to help generate the newletter database. Remember, if you do, you will receive a year or two's worth of exchange newsletters from another group, to review. Contact Myles at (212)427-017 to volunteer.

Zebra promises CP/M within a month (next meeting??) Cost should be under $100. Contact Zebra for details.

Some dozen members ordered Zebra Twistor board #1 at the meeting. Stewart promised to bring TS 1000 power supplies to the next meeting. He'll sell these very cheaply.

John Bell brought along a 1016 Rampack with dip switches installed on the case- for bank switching.

Tell Stewart what TS 2068 software or carts you want. He'll sell them at meeting for $3 or so.

NEXT MEETING

Sunday February 9th 1986, Huntington Public Library, 2PM.

CUMULATIVE INDEX

Cumulative Index Feb 84 to Dec 85

Page

Feb 84
- Introducing LIST 1
- Contents 2
- ROMPACK (Hardware review) 2
- 1510 Command Cartridge (Hardware review) 2
- Game changer 3
- DK Key 3
- XX compiler (Software review) 4
- Where to buy it 4

Mar 84
- First Dues 1
- What A Character - Using the Game Changer P.Donnelly 2
- Getting The Led Out " 3-4
- Hardware Tips 4

Apr 84
- Notes from the Editor 1
- Pirate Treasure (copy tapes for $2.00) 2
- Book review The ZX 81 Pocket Book by Trevor Toms (1981) 3
- Hardware Joystick Connections info. 4
- Hardware review- Centronics 101 Printer (refurbished) 5
- Where to buy it 6

May 84
- Introduction - Meeting Notes 1
- Software Review VOXCOMP 2
- Hardware info Machine to Machine transfers 3
  - A Tape Sound Conditioner 3
- Communications Modem & Compuserve 4
- Hardware Review Report Generator Board (ENER*Z) 5/6

Jun 84
- Meeting Notes & Index 1
- Software Review-Pennsylvanian Tower 2
- Supplier/Supply notes, Misc. 2
- Hardware Project: Byte Back MD-2 - Brother EP 44 Interface 5/6
- For Beginners only:Info on First Loader 2
- Spectrum to 2068 Basic Program conversion (Trans Twr.) 3/4

Jul 84
- Intro & Notes 1
- Log on Suggestions with Compuserve 1
- Book Review: Timex Sinclair 2068 by Fred Blechman 2
  - TS 2068 Explored by Tim Hartwell 2
  - 50 Programs for the Timex Sinclair by R Valentine. 2
- Member Questionare 3

Aug 84
- Meeting Notes 1
- Enlarged Character Modes 2068 by Jeff Street 2/3
- A Whale of an idea - Using the 2068 in business by H. Rait 4
- ZX/Profile Improvement by Kevin Smith 4
- Unploting on the 2068 by Jeff Street 5
- Catalog/Software received 6

Sep 84
- Meeting Notes 1
- Software Review Word - BASIC by P. Donnelly 2
  - City of XON (ZX 81/TS 1000) 8K/16K 3
- Hardware Coverting 2068 to Spectrum 4/5
  - EMU-1 Spectrum emulator (Doug Dewey) 6
- Software Astronomy Program"precession" by R.Howard 7
  - Piano 2068 by NAZIR Pashtoon 2
- Misc. Catalogs Received 6
  - Our Policy 6
  - VU 3D 10
  - Late News Flash 5
- Hardware RGB Adapter R. Gilder 8/9

Oct 84 Page
- Meeting Notes (Sept 84) 1
- Programs TS 2068 Blackmask - by Harvey Rait (adapted) 3
  - Insane Sound - by Patrick Spara 3
  - TS 1000 Robot - by Harvey Rait (adapted) 4
- Software Review Word Processing Spetext Review by P. Donnelly 5
- Tasword/Olivetti Interfacing - R Cunningham 5
- TIMEX A gracious Letter 6
  - Tech Manual extracts 6
- Hardware Bus Pinouts 7
  - Internal RGB Modifications - Bob Gilder 8
  - Review of Winky 2000 10
  - ROMS VS. EPROMS 11
- Misc. Pot Pourri - Peeks & Pokes 11
  - Catalogs Received 11
  - Special Articles 11
  - Hot Flashes & Cool Notes 12

Nov 84
- Meeting Notes (Oct 84) 1
- Index 2
- Hardware Review ROMSWITCH by P. Donnelly 3
- Software Special Header Reader by N. Pashtoon 4
- Catalogs Received Hex-Dec Conversion 5
  - Technical-Tips-TS 1000 5
- Hints & Tips Tape Head Alignment by P. Donnelly 6
- Fun ,N, Games Horserace by R. Cunningham 7
  - Black Mask Revisited 7
- Communications Corner Modems 8
- Graphics Tablet 9
- Hardware Special ROM MODULE by Bob Gilder 10/11
- Spectrum Software by Doug Dewy 12
- Letters 13/14
- Members Only 15

Dec 84 (Jan 85) Special Issue
- Late News 1
- Meeting Notes 2
- Policy & Index 3
- Vendor Report 3
- Hardware Review Kempston Joysticks by P. Donnelly 4
- Programming Techniquies (Basic) 5
  - (Header Writer) P. Donnelly 5
- Short & Sweet MC Loader by C. Russel 5
  - Aerco Enclosure Bob Gilder 6
  - "Beep" I,m Done 6
- Program 2068 Reconcile - R Cunningham 6
- Graphics Screen Dumps 7
- Technical Report Open the ZX-81 J. Peeler 8
  - Simple Output Port by B. Gilder 9
  - EPROMS on the 1000 by C Barut 10
  - TS 1000 Pulse cleaner 11
- ROM Cross Correlation Part 1 Spectrum/2068 - N Pashtoon 12
- Communications Corner BBS'S - BBS'S 13
- Software Review Supercode Toolkit by P. Donnelly 14
- Letter to LIST 16
- Special Pages N.Pashtoon (μ-Drives) 15
- Questionaire & Mailer Sheet 19/20
  - 21/22

Feb 85 Page
- Meeting Notes 1
- Policy, Classified - Index 2
- Software articles by members
  - Clock: S. Livingston 3
  - Tasman Utilities & Lister R Cunningham 4
  - Using the TS1000 in Education by S.Kaye 5
  - TS1000 Header Reader by C. Barut 6
  - Spectrum Computing - Review by P. Donnelly 7
- Technical Report Power Supplies by J. Peeler 8
  - 2068 Outport,part 2 by Bob Gilder 9
  - Hackers Notebook Joysticks 10
  - TS2068/Spectrum Microdrive by R. Pershy & N. Pashtoon 11
  - Sears RGB Monitor by P. Donnelly 12
- Graphics Curves - P. Bingham 13
  - Program Samples 14
- Communications /WP
  - Tasword 11 - Mine Review by P. Donnelly 15
  - BASICODE 15
- Letters to LIST 16,17,1
- Vendor Report 19
- Special Feature ROM Atlas Part II by N. Pashtoon 21/22
  - B. Microdrive Saga Continues by N. Pashtoon 21/22

Mar 85
- Meeting Notes 1
- Policy, Classified, Index 2
- Resistor Program by R. Howard 3
- Two Tape Recorders by M. Hauseveldt 3
- Info Sources 4
- Book Review "Powerful Projects" 5
- Graphics Showcase 6
- Communications MTerm 7
- Letters - Changing Times by S. Kaye 8
- Letters to LIST 9/10
- Buy it - Sell it 11
- Hardware Review A&J Microdrive by P. McConaghey/D. Jurries 12
- Technical Review Spectrum/USA by Bob Gilder 13-15
- Spectrum Emulation Chart 16
- Keyboard Conversion by C. Barut 17-18
- ROM Cross Referencing (Continued) by N. Pashtoon 19-20
- Members Only 21

Apr 85
- Meeting Notes 1
- Index/Classified/Policy 2
- System Review Zebra Graphics Tablet by P. Donnelly 3,4
- Graphics Page 5
- DOMSDOS - Universal DOS 6
- "Bold Print" D. Scoville & P. Donnelly 7
- Communications TBBS Protocols 8
- Buyers Guides Microdrives Compatibles 9
  - Vendors Catalogs 10
  - D. Lipinskis List 11
- Letters 12,13,
- Getting on the BUSS by T.R. Russel 15
- Technical Report Cooling your TS/ZX - R. Gilder 16,17
  - ROM Atlas - N. Pashtoon 18
- Mailer on Micro drives 20
- Library Sampler (may or may not be published) 21,22

LIST Group

CUMULATIVE INDEX

May 85 (June 85) — Page

Meeting Notes/Index/Classified 1,2
Graphics Line Draw - P. Fagen 3
Business Graphics - J. Gaddis 4
Software Reviews FP Compiler - W. Brzozowski 5
Pro File Plus - S. Kaye 6
Communications on line Notes - Sincus 7
ZX Forum 7
Bulletin Boards - Computer Shopper 7
Supplier Notes 8
Letters 9
Tape Worry M's - Bob Gilder/F Nachbaur/J. Bell(T.S) 12
Printout Printer Tip - S. Kaye 13
Repeat Tasword - Bob Gilder 13
Hardware Compatability Chart - P. Donnelly 14
Interface Zero Plans - W. Brzozowski - J. Oliger 15
Hardware Projects - RGB Interfacing the 4 - Sinclair 16
TS 2068/Sears/IBM - Hackers Journal 18
Using the Hunter NVRAM - P. Donnelly 19
Screen $ TS 1000 - C. Marut 20
Comments Surplus ZX81's - J. Peeler 21
Microdrive Microdrive Stretch - Staff 21
Follow up - Micellaneous, Policy 22
Special Feature TC 2068 - N. Pashtoon 22
Bank Switching 2068/TS1000 - N. Pashtoon 22

Jul 85
Meeting Notes & BBS notice 1
Index - Classified 2
Talk to me (Voice synthesizers) 4
Parrot Review 3
Super Parrot Program 5
Library Tape 7
Book Review 40 Best MC Routines by P. Jennings 8
Letters to LIST 9
W. Brzozowski on Hardware 13
Hackers Notebook If Zero on an Oliger Board 14
Communications Locals BBS's 15
Byte Back RS-232 & Tasword II 16
Joystick I/O - M.S. Morris 18
Read Data TS 1000 19
Policy 20
Programs Old Glory - H. Pulliam 21
Dictionary - P. Donnelly 21
Vendor News (Catalogs Received) 22

Aug 85
Index, Errata, News 1
Meeting Notes June Meeting 2
Hardware Group 3
Hardware Special 16k Rampack Bnk switching 2068 - Pashtoon/Donnelly 4-6
Tape Loading series Part 1 C. Bastiaans 7-14
Letters to LIST 15-17
User Groups etc Newsletter exchange 18
Graphics 19
Supplier News 20
Hardware Review Zebra-Talker speech synthesizer - P. Donnelly 21-22

Sep 85
Meeting Notes 1
Index, Softaid Message 2
Hardware Quickies Oliger Boards as Spectr/Emulators - C. Bastiaans 3
Improving the Emulator - EMU - C. Bastiaans 13
Feature Article: More on Tape Cassettes - C. Bastiaans 4-10
Word Processing Getting 64 Columns - P. Donnelly/J. Kealy 11
TS 1000 prgm - D. Fulmer/M. Helfgott 12
Letters 14-16
Vendor Report 17
Policy 18
Misc 19

Oct 85
Index 1
Meeting Notes 2
Communications Corner Poor mans modem 3
BBS Listing 3
More from 2050 Modem 3
Hackers Notebook RS 232 BetweenA TS 1000 & ZX Spectrum 4
Magnetic Tape Tidbits (Part III) - C. Bastiaans 5
Word Processing Tasword II with Zebra Disc Drive - A. Gippeti 9
Letters to LIST 10
List in Print ZX Computing 13
TS 1500 Data Acquisition System - J. Walker 14
Quickies 15
Codebusters Stopping Hackers in their tracks - P. Donnelly 15
Product info/ Policy 21

Nov 85
Index 1
Meetings Notes 2
Timex Disc Drives - John Gaddis 3
Try This - K. Skapinski 3
Communications Corner Time-X-change D. Clifford 4
Tasword-M-Term D. Pranitis 4
Hardware Projects Big Keyboard 2068 - J. Bell 6
Centronics-Aerco J.Bell 7
Letters to LIST 8
Book review Computer IF Techniques in Science - P. Donnelly 13
Schematic City ZX 81 14
Hacker Sackers Protection Schemes P. Donnelly 15
I/O Ports-1 N. Pashtoon 18
Library Tape # 4 20
Pot Pourri 21

Dec 85
Meeting Notes 1
Index 2
Vendor Report 2
Using ZXLR8 - Steve Kaye 3
Syncbits Ian Robertson 4
Bulletin Board Listing - Computer Living N.Y. 4
Tapes- Part IV in a Series - C. Bastiaans 5
Disc Drive Control & Interfacing - R. Gilder 11
Musical Xmas with TS 2068 - O. Jefimenko 15
Letters to LIST 16
LIST Database 17
Try These - W. Pedersen 20
Hackers Notebook Brother EP-44 to Sinclairs IF one - P. Donnelly 21
Hardware review IF III - P. Donnelly 22
Bargain Corner 22

JANUARY 1986

Meeting Notes 1
Index & Avagadro's Number by Myles Cohen 2
Library Tapes Update & Master Index News 3
Tape Catalog 'Multi-Tape'program-Bob Malloy 4
Disc Drive Control 5
& Interfacing Pt.2 6
by R. Gilder 7
Handy Keyword & Function Table- C.R. Bastiaans 8
Letters 9
to 10
L.I.S.T. 11
TS 1000 Types Take NOTE 12
Tas.II with Tas i/f & Bro.EP44- Bob Howard 13
Vendor Reports & Bargain Corner 13
Birthday Program 13
Hackers Notebook- Improve Sears Monitor 14
Wafadrive,RS-232,& Zerox 625C 15
Gavilan Printer Interface 16
N. Pashtoon 17
J. Bell 18
Activating the NMI on TS2068 : N. Pashtoon 19
Map & Mailer 20

Steve Kaye spotted the following article in Computer Living New York. While it may be too late for you to win the "contest" Mr. King talks about, why not drop a line to his "Yes, Virginia" address telling him how you use your home computer. Don't forget to mention what kind it is.

King's Corner

"Yes, Virginia, There is a Santa Claus..."

By Joe King

Many years ago, when New Yorkers had a real choice of what daily newspaper to read, the New York Sun ran a letter to the editor on the front page. A little girl, Virginia, plaintively wrote that one of her friends had claimed Santa Claus was a myth. Her dad told her to write, because if she read it in the Sun it was true. The editorial response (like this column) was headlined "Yes, Virginia...."

Last month Computer Systems News ran an editorial headlined "Real Men Don't Use Home Computers". Aside from the sexist overtones (humor is frequently dependent on derogation of a group other than the one the humorist belongs to), the editor definitively states that there is NO market for a home computer.

He then goes on to play up Mad Magazine's "humorous" article titled "Practical Computer Programs for Normal Everyday Use," citing the "What I wore" program, a database for over-crowded closets, the "Useless Gift" program to track who gave what to you, so you can fearlessly give it to someone else, and so on.

After several of his own suggestions (e.g., tracking local water use patterns to obtain the best time to wash your dishes) he invites his readers (ostensibly, they are power corporate users and systems people) to join in this game and submit "innovative" uses for a home computer, which will prove his point.

Of course, he is working at a disadvantage. The real "Men" he refers to, are people of both sexes who work with computers all day and at home, many at least, don't want to talk "shop" with mere hobbyists or home users; so he doesn't get the chance to hear from normal people - only "Real Men."

The conventional wisdom among computer "mavens" is that the highly touted home market died aborning because nobody could come up with a reason for a home computer for the mass market. Sure, there were a few hobbyists who were fascinated by the technology; some, with deep pockets, got hooked on telecomputing through the Source, Compuserve and computer bulletin boards; a few wanted to create their own programs for fun or profit; and some had quasi-business-type needs for word processing, spreadsheets and database management. Nevertheless, although the tools were there, the compelling reason to have and use a computer at home was missing.

Many home software developers thought that games were the only programs of interest for home users. Hardware manufacturers agreed, but added capabilities for light business use. No one came up with real reasons to invest in and use these high powered machines at home.

I did a small, very inaccurate and not at all projectable survey and found that most of the home users I contacted used their machines either as an extension of the PCs they worked on at the office, or else worked at home on projects that had a business orientation (professional writers, moonlighters, tax professionals, etc.). Some said they used the computer for games and for teaching their children. One used a word processor and databased concordance to write sermons. Some intrepid souls even kept their home checkbook on the computer. And so on.

Let's have a Contest

I'm willing to bet that many of you have come up with valid uses for a home computer that the power users and data processing "mavens" have never thought of. So let's have a contest: **The First Annual Yes, Virginia, There Is A Use For Home Computers Contest.** Here are the rules: One entry to a letter; each entry to be 150 or fewer words; specify which computer you use and if it involves commercial programs, the name of the program and the publisher; if you wrote the program, what language you used. Send entries to "Yes Virginia", P.O. Box 20025, Dag Hammarskjold Center, New York, NY 10017. The best entry (in my own subjective opinion) will get a prize (I will choose a suitable one after I see the entries). All entries will be sent on to the editor of Computer Systems News to show him that some "REAL" people use home computers. CSN is not the N.Y. Sun, and just because I read it there doesn't make it true. I'll report on the results of this contest next month.

To protect or not, that is the question

Copy protection is an industry bugaboo. Without it, the publishers say, every program sold will result in dozens, if not hundreds, of illegal copies. The creators and innovators won't get paid for their work and therefore there will be no incentive to write new programs. Nonsense, say the users. Copy protection gets in the way of effective use of the program. Some can't be conveniently copied to a hard disk; others require the use of the distribution floppy disk even if the program is put on the hard disk. If a disk fails, you may lose the use of the program until the company sends (at a charge) another copy.

Bring down the retail price, say some users, and the incentive to pirate will be gone. Baloney, say the publishers, there are illegal copies of Borland's Sidekick and Turbo Pascal, and those are inexpensive to buy.

I don't like copy protected disks; but I don't have the answer. Last month I talked with Jeff Fox and Jake Geller of Fox and Geller, the publishers of many utilities for dBase and Lotus. They originally did not copy protect their dBaseII program generator. When they came out with a version for dBaseIII, they followed Ashton-Tate's lead and added copy protection. Recently, they discontinued protection from all their programs. According to Fox, they saw no change in sales with or without protection. However, it was more profitable to sell unprotected disks, since they didn't have the added cost of the protection scheme.

Wordstar was said to be the most pirated program in the marketplace. When Wordstar 2000 was released it was protected. Subsequently, Micropro removed the protection. Borland is now selling an unprotected version of Sidekick for a small upcharge. The whole concept of User Supported Software is that you can make copies of it and give it to your friends; if they want to, they can pay a nominal fee and become registered users and get support from the developers. Which is the wave of the future? I don't know. But I can say that any protection scheme that inhibits the continuous and effective use of a program is counter productive and must be discontinued.

The best way for the user community to make its feelings known is to not buy this type of protected software, and to write to the companies concerned. Representatives of Lotus admitted to me that they are aware of the problem and are considering alternatives. But for the most part, large software companies are interested in large corporate customers. They talk of site licensing and other alternative that don't help the single user. Let them know how many sales they are losing and maybe, just maybe, they'll listen. Of course, this requires a commitment on the part of the user; can you live without dBaseIII or Lotus, for a while?

Got those hard disk file-finding blues?

Keeping track of the files on a floppy disk is a bother. You always end up putting the wrong disk in the drive and have to switch to another. Hopefully you are using some sort of cataloging system to keep track of everything. Well, if you are using a 10 or 20 meg hard disk, the problem is multiplied. Good old DOS gave you a hierarchical directory system to bring some order to this madness, but you still have to find the right directory, subdirectory, sub-sub and so on.

Copying and deleting files, making new directories and erasing old ones, changing labels, examining files are all a pain in the neck. But it doesn't have to be so. There are several utilities that take the work out of it. The one that I use and like best is XTREE by Executive Systems, Inc. This handy program (not copy protected and reasonably priced) boots up and gives you a graphic picture of your directory tree structure. Then, by moving the cursor you can examine the contents of each directory -- list the files, print them to screen (in either ASCII or hex), delete them, copy them, rename them. You can make a new directory and move files into it. You can mass manipulate them with wild cards. As you use XTREE it keeps a running display of what you're doing, the number of files, the amount of bytes (both on the disk and the current directory) and more. I find I use it frequently throughout the day and wouldn't be without it.

Copyright 1985, Joseph P. King. All Rights Reserved.

Joseph P. King is president of Four Seasons Publishing Co., Inc. (a New York based consulting firm) and is host of The Personal Computer Show heard Sunday nights at 8 P.M. on WRAI-FM 99.5.

ADDITIONS TO THE COMPUTOR DICTIONERY

DICTIONERY - The relationship between dictionery and dictionary is similar to that between stationery and stationary, with the possible exception that one is not a word.

RUMERS - cathartic belchings which contain snippets of misinformation or potential misinterpretations

PROGRAMME - a set of algorithms used to solve a problem and written before computers were invented.

EXPONET - device associated with catching Mantissa rays

MAYBE - contraction of the words may and be. As in "This maybe a good thing", to quote Sir Clive

PERIPHREALS - same as periferals

VENDOR REPORT

Glen D. Clifford	2050 Modems-BARE $25.00
13910 Halldale Ave.	Westridge Closeouts.
Gardena, CA 90249	No Software,case or P.S.
(213)516-6648	10 day exchange privilege

BARGAIN CORNER

Texas Instruments Data Recorder	$10	Toys-R-Us,if available
Double-Dubbing Cassette Deck Monaural	$20	ODD-LOT-check price,it may change.

Paul Donnelly
L.I.S.T.
P.O. Box 498
Centerport, NY 11721-0498

Dear Paul,

Being the intuitive guy you are, you should have figured out the significance of my little "bomb-shell" by now. I'll place little bet that you have already tried it and written the rest of the patches--which take only a pittance of bytes. Maybe you have also patched the corresponding OPEN. Just be careful not to accumulate unresolved stack returns. The best temporary location for the patches is the upper end of the SYSCOM table. It can be eliminated once bank switching has been restored.

I think you should tell John Bell to move his PIO address to a location which does not interfere with the 2040. A lower address would take it out of TIMEX reserved space, but it would be even better to put it at the location assigned by TIMEX. Implementing my "fix" makes both printers accessible.

I am enclosing my unsorted text for part 2. I am also sending you the missing (but optional) annotated disassembly listing of the 2068 CLOSE routines. This belongs to the original part 1.

If you saw my article on the Mandelbrot set in CTM, you must make allowances for both Chet and me. Relatively speaking it is a remarkably good job for him. My goof is that the GO TO 2200 in line 2140 should have been GO TO 2160.

I did not actually test run this version before releasing it. One interesting feature of a gray scale printout is that it is a "color-by-number" master. The gray scale generator you showed can be modified for the ZX81 quite easily. It is part of the Mandelbrot programs I have, as is machine compiled arithmetic to slash the execution times. I will make MANDY4 available at $10 per copy if anybody is interested. This tape generates files, displays them, and prints them out. With my "fix" they can be printed out to a graphics printer. It is not hard to go a step farther and print out color separation overlays.

I give you permission to take off on my "fix", but don't take it far, as the SYSCOM table. That must wait until I have the new WIDJUP BUS, buffered six slot motherboard on the market to support it. It does not take full restoration to add RAM banks. Because of recent reductions in the cost of static RAMS, these will be the first truly bank switching boards for the bus.

Though I have most of the formats for different devices in the SYSCOM table, I cannot publish them yet. For the moment I am using core to add the missing device dependent OPEN and CLOSE routines in EXROM by copying EXROM, then replacing it with core to the extent of 16K. That also fixes the jump table and the bank switching services. It is something which can be done by anyone, once they know how. This does not require restoring the bank switching system, only chunk address switching and physical removal of the EXROM. Of course nonvolatile RAM is required.

Please don't publish everything I send all at once. I am not as prolific a writer as you. I challenge you to find a simple patch for (-ABS X)+(ABS INT Y).

My Olivetti printer has been giving me fits. I am having lots of trouble with the ACK signal timing. Wouldn't you know? That page in the user's manual is as blank as snow. Could John Bell help me out on that?

Respectfully yours,
William J. Pedersen
The WIDJUP Co.
1120 Merrifield S.E.
Grand Rapids, MI 49507

```
1000 LET NUMER  = 1
1005 LET DENOM  = 1
1010 LET BEST   = 4
1015 LET RATIO  = NUMER / DENOM
1020 LET ERROR  = RATIO - PI
1025 LET DIFF   = ABS ERROR
1030 LET BETTER = BEST > DIFF
1035 IF BETTER THEN LPRINT NUMER
;"/";DENOM;TAB 11;"ERROR=";ERROR
1040 IF BETTER THEN PRINT NUMER;
"/";DENOM;TAB 11;"ERROR=";ERROR
1045 IF BETTER THEN LET
        BEST   = DIFF
1050 IF ERROR  > 0 THEN LET
        DENOM  = DENOM + 1
1055 IF ERROR  > 0 THEN LET
        NUMER  = NUMER + 2
1060 LET NUMER  = NUMER + 1
1065 GO TO 1015
```

```
1/1          ERROR=-2.1415927
2/1          ERROR=-1.1415927
3/1          ERROR=-0.14159265
13/4         ERROR=0.10840735
16/5         ERROR=.058407347
19/6         ERROR=.025074014
22/7         ERROR=.0012644893
179/57       ERROR=-.0012417752
201/64       ERROR=-.00096765347
223/71       ERROR=-.00074756288
245/78       ERROR=-.00056701247
267/85       ERROR=-.00041618291
289/92       ERROR=-.0002883058
311/99       ERROR=-.00017851219
333/106      ERROR=-.00008321928
355/113      ERROR=2.6728958E-7
```

SPECIAL NOTE

This month we will begin publishing W.T. Pedersens comments on TS 2068 Bank Switching. Bill has an enthusiastic approach to this issue,which we're sure you'll find interesting. We hope his theories can be realized in hardware, without the need for too many components. How about some comments from you hardware hackers out there!

12/5/85

Paul Donnelly
L.I.S.T. GROUP
P.O. Box 498
Centerport, NY 11721-0498

Dear Paul,

Please excuse the lack of a copy of the second installment of the bank switching series. I accidentally triggered the bubble-sort on the file. Now if only someone would invent an unbubble-sort...

Be that as it may, let me give you a short summary of it.

The second installment, like a sonata, fails to reinforce the first. Instead it deals with the way the SCLD initializes and patts. This installment is not supported by machine code for a good reason. It would detract from clear exposition. The way the SCLD works can be grossly misunderstood. It cannot be dealt with in more than essential elements the first time around.

The first time around lays the groundwork for understanding WHAT bank switching is FOR--and HOW it gets the job DONE.

Without a goal, all the explanations in the world would be so much high school homework.

It isn't until installment 3 that the full workings of the BSC and SCLD macros are tied together to block out the entire plan.

Jeff Mazur said it looks complicated because it is. That left me with the feeling that Jeff did not have all the SCLD specs. Why else would he have declined to tackle such a challenging job of elucidation, at which he is an expert.

I don't have the specs either, but suspect they might be obtainable from the supplier with the grace of TIMEX's permission. The only logical supplier is ZYLOG, who would be highly motivated to introduce a chip comparable to INTEL's GPIB 8291A, but with extended features.

This does not prevent doing very productive detective work to discover most of its secrets. There are numerous clues in the existing machine code. Some are still hidden, but what I have gets the patient out of bed. I cannot yet implement "TRANSFER OF COMMAND", and some other IEEE 488 type commands.

You can be sure that it does not take a swarm of DIPs to implement the system. Most of it is already in the 2068. The chips attached to BEUS vary in complexity but implementing RAM memory expansion requires four bytes of registers and a little steering logic.

My being disabled (physically) did not matter too much before, but now that I am getting into the hardware business, I wish I had a partner to work with. I was wondering if Oliger would be willing to collaborate with me. I don't get out much.

We have a pen pal in common. Joan Keaty has been goading me to be more aggressive,to blow my own horn more often. I like that, though I shouldn't let on. Actually it is very sound advice. I am not embarrassed by having abilities other people would sell their eye teeth for. At the same time I am not envious of those with talents I do not possess. I used to search them out and have run together. Now I get a bit lonely. Then I get a letter from Joan or a customer and the old fascination has a rebirth.

I have enclosed some things which are,..nnnbh... Maybe you can use them. A new catalog is included. There is a program note so those who own TypaLot can use BOLD characters that I would like you to run.

Don't blame me if you try the tape I have included.

TOURIST B is now available. This is the bank switching disassembler I mentioned in my last letter. It might work with the TC2068 as is, but even if not, it would take at most a few pokes and relocation. It depends on how many of the patches were made before releasing the Portugese version. From what I can gather, the only thing they fixed was the floppy disc routines. If they did this by error trapping, as I suspect, they have done no more than AERCO.

Respectfully yours,
William J. Pedersen
The WIDJUP Co.
1120 Merrifield S.E.
Grand Rapids, MI 49507

Thanks Bill:

I never could win at TIC-TAC-TOE. We will be publishing much of your material in the coming months. I am impressed by what I see, and you can be sure that your comments on the SCLD and IEEE488 will stir up quite a bit of interest. (Most techies feel the internal SCLD is only 1/2 of the system).

LIST

Centerport, N.Y. 11721

Brother International
Typewriter Division
PO Box 159
Piscataway, N.J. 08854

Dear Sir:

Members of our user group, and others in the USA and U.K. have successfully interfaced your EP-44 to a number of Timex/Sinclair computers. Copies of some of the implementations are attached. Please feel free to provide this information to anyone who asks.

As owners of the EP-44, I think we can all say that we are very pleased with the EP-44's abilities as a typewriter, mini word processor, and computer printer. There are some technical questions, however, which we would like to resolve. They are:

1) Is it possible for the EP-44 to recieve text from an outside source (e.g., thru the RS 232 port) and store it in NVM? If special software is required to modify the codes of some of the characters (e.g., control codes), we are sure it can be developed, and would be happy to try to generate the algorithm, based on your hardware requirements. Many of us are even willing to make hardware modifications to achieve this end.

2) Is it possible to change the EP-44's character set. That is, if the dot pattern: are stored in ROM or EPROM, can this chip be replaced, and what are the addresses of the codes. Better yet, can the codes be placed in NVRAM and accessed from there (see next question).

3) Can the CPU in the EP-44 be accessed? And, what type of microprocessor is it?

The information requested above, if available, would help us to dramatically improve the already outstanding features of the EP-44. For example, with these specs, we feel that graphics could be generated, that the EP-44 would provide a 4K editable print buffer, new character sets could be redefined and finally, if control of the CPU can be gained if, the necessary MC software for driving a modem could be built into, say, 1 or 2K of the NVRAM.

Please give this requiest your serious consideration and thank you for your help.

Yours very truly,

P.J. Donnelly

1166 Cedar Avenue
Shady Side, Maryland 20764
24 November 1985

Dear Timex/Sinclair User Club:

I am getting out of the computer as a hobby and would like to dispose of my equipment with a minimal investment loss. I offer the following equipment for sale. I will accept bids via mail with a SASE. NO PHONE CALLS!!! This letter has been sent to several clubs so you will be bidding against many. Equipment will of course go to the highest bidder. Bids should be for all items in list and not selected equipment; however I may consider such requests. Payment will be made by money order only. All items are fully functional.

(1) Krazy Kong
(1) Flash Card
(1) Pop Star
(1) Gun Fight/Tic-Tac-Toe 3D/Life
(1) Star Trip
(1) Space Raiders/Bomber
(1) Sorcers Island
(1) Graphics 1
(1) The Organizer
(1) Money Analyzer
(1) Mega Mind
(2) Flight Simulator

8 paatisoes of Sync Magazine, catalogs, 4 past issues TS Horizons

2' Ribbon Cable with connectors

ZX-81 with power supply, cords and manual

ZX-81 with external Keyboard with power supply, cords and manual (Computer original case missing but computer is fully functional)

64 K ram module

(2) 16 K ram modules

Assorted xerox copies of construction articles

Unencoded Keyboard (Jameco KB54)

1 Copy of Machine Language Programming Made Simple for Your Sinclair

James Stymowicz

Applications RESEARCH Corporation
dayton, ohio 45402

Dec. 16, 1985

Dear Paul,

Enclosed find $15 for my 1986 dues!

I've been using John Olsen's new disk interface for the past month and I am very impressed with it. I currently use it with the Mdek 3" disks (160K), but I have used it successfully with double and quad-density disks, too. The present software implements a "system-save" patch in BASIC that allows RAM images to be saved to numbered files - cool great, but all will change when Reg Kingsley gets his DOS going - soon, I hope!

The hardware is up to the usual high Olsen standards. The kit goes for $96 sans cable. I got my Mudisk for $125, so this is a cheap but neat way to go. John's bank switched software is well-done and leaves open the option of BASIC extension, as it works by intercepting RST 08H. As soon as I have more time to use the system, I'll send a more detailed review for the newsletter.

Kurt Hildebrandt

BROTHER ELECTRONIC TYPEWRITER EP 44 SPECIAL CHARACTER SET

{	is 7Bh or 123	ì	is 8Ch or 140
|	is 7Ch or 124	í	is 8Dh or 141
}	is 7Dh or 125	A	is 8Eh or 142
Ç	is 80h or 128	A	is 8Fh or 143
ü	is 81h or 129	É	is 90h or 144
é	is 82h or 130	æ	is 91h or 145
â	is 83h or 131	Æ	is 92h or 146
ä	is 84h or 132	ô	is 93h or 147
à	is 85h or 133	ö	is 94h or 148
å	is 86h or 134	ò	is 95h or 149
ç	is 87h or 135	û	is 96h or 150
ê	is 88h or 136	ù	is 97h or 151
ë	is 89h or 137	ÿ	is 98h or 152
è	is 8Ah or 138	Ö	is 99h or 153
ï	is 8Bh or 139	Ü	is 9Ah or 154
¢	is 9Bh or 155	⌐	is A9h or 169
£	is 9Ch or 156	¬	is AAh or 170
¥	is 9Dh or 157	½	is ABh or 171
₧	is 9Eh or 158	¼	is ACh or 172
ƒ	is 9Fh or 159	¡	is ADh or 173
á	is A0h or 160	«	is AEh or 174
í	is A1h or 161	»	is AFh or 175
ó	is A2h or 162	Ð	is F1h or 225
ú	is A3h or 163	µ	is F6h or 230
ñ	is A4h or 164	ø	is EDh or 237
Ñ	is A5d or 165	±	is F1h or 241
ª	is A6d or 166	÷	is F6h or 246
º	is A7d or 167	°	is F8h or 248
¿	is A8d or 168	²	is FDh or 253

(d omitted after decimal for clarity)

The above list shows the decimal and hex codes for the special characters available in the 8 bit mode. To use the EP 44 with the Tasman Serial Interface and access these with TASWORD II word processor set the modes as follows:

Baud Rate 110, Bit Length 8, Parity N, New Line CR+LF, Code 8 bit, ER Y (in some cases ER set to N may be better so try both). IN ORDER FOR THE SPECIAL CHARACTERS TO PRINT "CODE" MUST BE 8-BIT!

Using the Tasword Main Menu select "define graphics/printer g" and you can assign any 16 above as the graphics character on keys 1 to 8 shifted and unshifted. This can be saved with Tasword II for future use. The form of entering is "code graphics character" which you select from list displayed ..when it goes to bottom first enter 27, then ENTER, then decimal or table above for the special sign or character shown, then ENTER. Now select the next key character to modify. You can see the Tasword table change so it is easier done than explained.

BOB HOWARD, WA0DLI

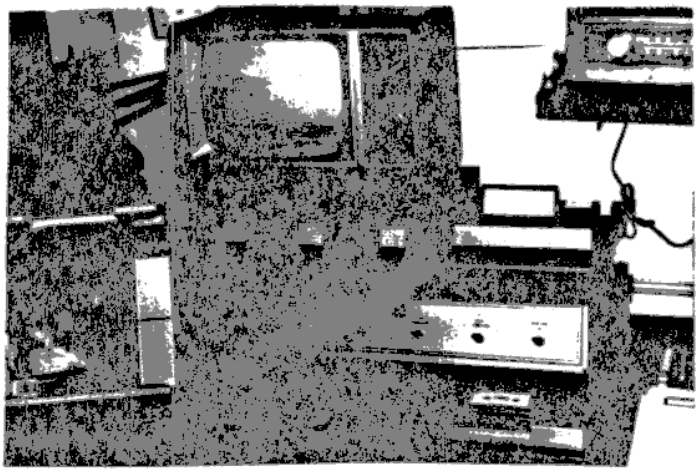

December 2, 1985

Dear Fellow T/S Users,

I presently own a T/S 2068 and am very pleased with it and all the prifials attached. When I heard that a disc drive is available and that it is a 3" drive that made me more excited and inthused.

I know there are other interfaces on the Market and some may be a little faster and promis more but the Portuguese set up seems to be the one for me.

Inclosed you will find a picture of what I call my controler box which houses all the power supplies, a Radio Shack amplifier, a UHF to VHF converter and now two 3" Hitachi disc drives SS/DD which at this time are not operating.

The two drives are the reason for this letter as I have no documentation as to how to hook them up to any interface. I don't think they are Suggart compatable as all they have on the back side is a 20 Header pin connector. No seperate in power connection as on other drives.

I bought the drives from a mail order house but no docs were included and several calls to Hitachi of America were negative as to where I could get help as Hitachi has gone out of this 3" drive business.

While reading the May issue of SUN Magazine and the article about the Portuguese set up I came across your name and address and reading about your knoledge and know how of this unit, It seems that if anyone would know about this disc drive hook up it might be you or your group.

At the present I am the Librarian of the Pittsburgh Area Computer Club (PACC) in the Timex/Sinclair Sig. Our Sig is not large at this time having about 35 members but growing and with much to offer.

A few of our members myself included are interested in RGB monitors as none in the group has one or has seen a RGB connected to a 2068. Any input will be greatly appriciated.

Hope to hear from you soon
I remain yours truly

Rich Norris
1200 Prospect Road
Pittsburgh, Pa. 15227

412-882-7873

Rich Norris - I think you'll find an answer right here in Letters to LIST.
Your circuit is printed in this issue. I'll see what we can do about that article.
I think it's John Oligers and may be public domain. Do you know about the modificati
put out by Tom Bent of Syncware News?

807 N. Fairway Rd
Glenolden, PA 19036
November 19, 1985

Long Island Sinclair Times
P.O. Box 438
Centerport, NY 11721

Sirs!

The attached list represents a T/S-2068 inventory that I have for sale. Please distribute the list to your membership for consideration. Thank you.

Sincerely,

Michael M. Rymotovich

T/S-2068 Inventory

Item	Value	Price
T/S-2068 (in box w/all accessories)	150.00	100.00
T/S-2068 (in box w/all accessories)	150.00	100.00
AERCO Centronics // Printer IFC	69.95	50.00
TASWORD TWO Word Processor	48.95	30.00
PRO/FILE 2068 Data Base Program (w/ 143 page manual)	28.95	20.00
VU-CALC Spreadsheet Program	16.00	10.00
VU-3D Graphics Program	16.00	10.00
UPLOAD 2000 Software Converter	19.95	15.00
ANDROIDS	11.00	7.00
VOICE CHESS	22.45	15.00
WAR in the EAST	17.45	15.00
LINHOLD Stock Analysis	19.00	15.00
ANALYSIS Stock Analysis	15.00	10.00
PORTFOLIO Investment Data Base	15.00	10.00
Assorted Financial/Educational S/W	50.00	30.00
T/S-2068 Beginner/Intermediate Guide	9.95	5.00
	$ 657.65	$ 442.00

Best reasonable offers will be accepted!

Dec 11, 1985

L.I.S.T. Users Group
P.O. Box 438
Centerport, NY 11721-0438

Dear L.I.S.T.ers:

Holiday Greetings from the heart of the freezing Midwest!

I've just realized that it's been a whole year since I've become a member...and consequently it's been a whole year since you've heard from me! I've been meaning to drop you a line or two since then (after all, I hear from you once a month...) when BLAMMO...a whole year goes by! Gosh, am I havin fun, or what!? In any event, you were bound to hear from me sooner or later, if only to tell you I'm renewing my membership (check enclosed).

Well, I'm renewing my membership (see previous note regarding enclosed check), and I gotta say that you guys are doing a great job! I raise a glass of holiday cheer to the last twelve months and look forward to the next twelve. I only wish your meetings were a little closer to my house so I can join in and help out. As a matter of fact, I'll be in the New York area the week of Christmas (visiting the In-laws in Port Chester), it's too bad you're not having a meeting, I could stop in and at least shake your hand.

I'll tell you what I will do when I'm in the area, though. Library Tape #3.5 just left my house a coupla days ago. It's making two more stops before it comes back your way. When it showed up here I was pleasantly surprised and somewhat unprepared. I've been working on two programs that I want to donate to the library, but one's not quite finished and the other has a persistent bug in it. Rather than holding up the tape, I sent it on without my programs. By the time I get to Port Chester, I'll have the one debugged and on cassette (hopefully I'll have both). I'll drop it in the mail to ya when I get there.

Just one other thing before I close. I just recently got a hold of a great keyboard that's big and has lots of keys (its got a case big enough to drown two TS1000's in...). I'm really looking forward to turning it into a "SUPER 1000" with all the extras, but since I'm a software kinda guy I need a little help. Could you point me in the direction of a good article on how to put together what it takes to wire up extra keys for shifted functions such as cursor arrows, DELETE, GRAPHICS, EDIT, and the like? The keyboard's got a cursor pad that I'd really like to implement. I'm also interested in implementing a REPEATing key if I could find a circuit for it. I'd really appreciate your help, if you could.

Well, time to close for now. You'll definitely be hearing again from me soon, though, so until then...

SEASON'S GREETINGS!

Mike Leidel
415 Greenwood
Muscatine, IA 52761

West Covina, CA 91790
December 23, 1985

John Oliger Co.
11601 Whidbey Drive
Cumberland, IN 46229

Dear John,

HOORAY! Your A and B boards for the JLO Disk I/O arrived on December 19 in West Covina, which made my Christmas!

Now would you believe your kit-prototype system beat out all the commercial units I had ordered in arriving, so it was the first to allow me to try my 3-inch AMDEK system.

First I had ordered at least 4 months ago..

A Timex-Portugal system less drives from xxx.
A Kempston (English) Disk from Chara in Sweden.

When nothing was received from xxx except an Interface III, I called and was informed that he was having trouble with Timex-Portugal and was dropping the line in favor of the Kempston. So I said change my order to a Kempston plus EMU-4 edge adaptor and a ROM Switch since xxx said Kempston didn't work with EMU-OMNI or other cartridge port ROMs. (I was able to cancel my order, just before receiving your I/O.. I think was aced out by Zebra on the Timex-Portugal stuff.)

So I may still get a Kempston from Sweden..however xxx last week when I cancelled my order, said Kempston had changed the design (perhaps to match Spectrum Plus or 128) and he had to return the last two received as they were putting gargage on the screen. So only "old" Kempstons work! (This FYI only to you!)

Your system so good AMDEK III worked with its cable out-of-the box, no settings changed! The JLO SAFE SYSTEM tops because:

1. No edge adapter needed as with foreign systems.
2. Transparent as to whether Spectrum or 2068 mode.
3. Super easy two key-strokes to program in the well known Sinclair tradition...NO IBMese to operate drive.
4. Approx. 50K save with machine parameters intact and files embedded ideal for Profile 2068 as don't have to load program and file.
5. Directory and 4 files per side wastful for short program but convenience far outways this and you know that even a full Spectrum program will fit.

I have all the parts to build my NMI but can't find a place around here that has HC or HCT chips. Enclosed is $2 could you send me a 74HC74 or 74HCT74D. I may build a lucite box around the interface and put the button on a hinged lid. Too pretty to hide like old Mc Intosh Amplifiers with the exposed tubes.

Editors note: the name of the other vendor was deleted at Bob's request.

R.L. HOWARD

Sirs or P. Donnelly:

I wish Andy Gippetti would write soon more on putting TaswordII on disk drive program because you people who are technically-trained don't realize that just hobbyist - TS users are oriented to the cassette programs that load in a lump, save in a lump, and have not that directory capability of "need some more info, back to the disk and whomp - here it is". With Aerco, Oliger, and the Portugese DD's all coming at us. (Mine from EMC (Portuguese) arrived day before yesterday., you can't publish too much for those of us who are going to think "trees", "pathnames:, etc. or even "pages" like Aerco's DOS.

Thanks
J. Kealy

Well, Andy or John G? can you help?

Long Island Sinclair Timex Group

L.I.S.T.

Dear List

I guess it's time for renewal again. I've been meaning to write for quite a while now but have been putting it off. I have several items to pass on to other members.

Enclosed is a circuit that I use that allows two 16K timex rampaks to be connected to my T/S 1000. This gives me 49151 for ramtop. I think with further ram decoding I will be able to work in a third rampak in the 48 to 64K area. If you have SQ41 in the library I would like to get a copy of the article dealing with ram decoding. If there is a fee for that please let me know.

I have a modified operating system on EPROM for the T/S 1000. The printer routines have been rewritten to accommodate the Byte-Back parallel printer interface. All original routine entry points have been maintained. The new printer routines work along the same lines as the universal printer driver software in that it supports the three LPRINT modes,COPY,and LLIST. Installation require's the removal of the 8K PROM and plugging in a 2764 8K EPROM in it's place. Some T/S 1000's have the original PROM soldered in. After installation, printing through the BYTE-BACK I/F is as easy as typing LPRINT,COPY,or LLIST. 80 columns is supported. I have permission from TIMEX to produce upto 100 EPROM's. The EPROM and documentation is available for $20.00

Thank you
Don Bailey
40 Aspen
Great Falls,MT
59405

Thanks Don

MORE: Bob Howard - WA6DLI

Load (W/O"") Produces a directory, 2 key #'s for a file and it's loaded.
Please pass this info on the Heinz H.
TASMAN I/O works on JLO IF also.
The NMI will function like Interface III (Breaks into programs so you can make disk backups)

RICHARD J. CUNNINGHAM
133-30 118 STREET
S.OZONE PARK N.Y. 11420

DEC. 12,1985

LIST GROUP
P.O. BOX 438
CENTERPORT,N.Y.
11721-0438

ATTN: PAUL DONNELLY

Dear Paul,

I am enclosing herewith my check for $15 to renew my membership for the coming year.

It has been an eventful year for me computerwise. You may recall my past letters regarding trouble with the A&J Microdrives. They have been running for months now with no trouble. That outfit does provide considerate service.

I told you in my last letter in June of my purchase of the Spectravideo 328. Itisa lovely machineandI learned a lot from it. But it took months to locate sources of hardware so I could upgrade it. And to upgrade it would cost over $600 (2 drives, CPM, 80 Colum, etc. SoI sold it. At a loss of course. But it was worth it for the time I had it.

NowI have optedfor the Commodore c128. I got the computer and 1571 drive from Crazy Eddie for $465. It will be a great challenge since it has three modes: c64, c128, CP/M. And I have not, till now, ever used a disk drive. In addition it has a built in assembler, disassembler, and MC monitor. Lots to learn.

Yes, Paul, I did consider the Sinclair QL. It may well be a better machine. But I did want to get into someone standard stuff, disk drives, MS basic, etc. And pricewise both machines are close. But after the Spectravideo I don't want another potential orphan. It is still a hastle getting hardware and software for the 2068 and were it not for groupssuch as ours it, too, would be dead. Then, too, there are rumors of Sinclair filing for bankrupcy. Think thatis true?? Clive is a genius with computers but not too sharp in business.

Finally there is the vast software for Commodore and CP/M. and the readily available hardware and service for the 128.

Have no concern about my interest in the 2068. I still love it and will work with it often. I have too many programs I have written for it to bother transposing. And in many respects it is much easier to use now with the microdrive.

I do have two problems that are most discouraging, however, and perhaps someone out there can help me. The most vexing is the spacebar. The spacebar must be hit square in the middle or it doesn't work. It is really discouraging and sometimes I want to give up because of the errors it causes.

Is there anyway I can open the case and correct this myself or is it a factory job? If it means sending it out I will give up on the whole system I guess.

The second problem is less vexing. I now have a composite/RGBI dual monitor. And although it gives great color with the c128 I get no color with the 2068 and the Composite monitor using the video port on the computer. Can this be remedied?? The 64 column mode,by the way, is not greatly enhanced even with the monitor (358x358 res.). I assume it is the signal from the computer.

Well, that's it Paul. Hope you can answer my questions. And I look forward to another year with my friends from LIST.

Best Regards,

Richard

Follow 2068 users,

December 14, 1985

We here at SINCUS-the Sinclair Computer Users Society, a small upstate New York user group have a program we wish to share with you-CLONE. We are a not for profit organization, and like many such groups find ourselves trying to keep from running in the red. With the sale of CLONE, or rather the right to sell CLONE we hope to raise a little green and give other groups the chance to make a little cash. We are making two offers, and should either be accepted, the other will be withdrawn.

The first is club site rights- a club pays us $50 for the master and documentation and can make 50 copies at whatever price it wishes to sell them at. After the first 50 are sold, then we ask $.48 per sale. The club may sell to any of its members or guests at its meetings. As many club site rights will be sold as applied for.

Second, the national distributing rights, a group or individual pays us $250 for the national (US and Canada) rights, and $.42 for each sale. Only one national right will be sold. Counter offers will be entertained.

What is CLONE?

A product of the fertile mind of our one and only Wes Brzozowski a wizard recognized by other wizards in the 2068 world, CLONE will copy almost any program you can run on your TS2068, so you can make back up copies of any of your programs.

What about Spectrum programs?

CLONE will work woth a TS2068 with a Spectrum ROM installed, a Spectrum emulator, provided the second ROM, the EXROM has not been removed.

Is that all, copy programs?

It has a HEADER READER feature, so if you want to save to disc or microdrive you can see how the program is laid out. It copies in BLOCK COPY, if you have one tape recorder, you can save most programs in this manner. However with two recorders you can use LAST RESORT and copy almost any Spectrum software. A feature calibrates the program timing by reading a small sample and figuring how wide the pulses need to be extended.

Documentation ready?

Yes, four pages-but quite user friendly with menus on most screens.

Basically we have the program, that could realistically sell for $20, you have the membership, and the tools to produce the program with little investment and with time on the part of a couple members, your club could have a substantial increase in the cash flow department. We sold trial pieces at $5.00, and sold 10 at the first meeting. These are the only sales of this fine program. After January 15, 1986, SINCUS will market CLONE to its corresponding members. These sales "road tested" CLONE for 5 months, and Wes saw the bugs crop up and one by one were shot down. It is ready and works great!

IN NO CASE ARE WE CONDONING the illegal copying of software WITH THIS PRODUCT.

The product is to be marketted under the name "CLONE", by Wes Brzozowski, SINCUS, POB 36 Johnson City, NY 13790. The program is copyrighted a SINCUS holds all rights. The title page will be modified to carry the vendor's name and address.

If anyone buys the national distributing rights, the offer for site rights will be immediately withdrawn. If any group buys the site rights, the national rights offer will be withdrawn.

To protect your possible interest in this venture, send a check for the amount indicated above, made out to "SINCUS". Send a phone number, name and time of person to be contacted. We will notify all interested parties on their offer as soon as possible. No check will be cashed until we talk with the interested party, to clarify what the program will do or wont do and how the "rights" work.

We hope to hear from you soon, we are not trying to get 'legal' in this but we are trying to spell out what we are selling, and what you can expect. We want satisfied customers, both buyers of rights and their buyers. Our names are on the line. You can get in touch with me or Wes most any evening at the numbers listed. We hope that this program gives its users protection from lost data on their expensive commercial programs. If interested write or call SOON,

Sincerely,

Paul Hill

CALL for business information----------Paul Hill, Secretary, SINCUS
(607) 798-7219 4-9pm

CALL for technical information----------Wes Brzozowski, SINCUS
(607) 785-7007 6-9pm

OR write either at---SINCUS
POB 36
Johnson City, NY 13790

LIST

DISK DRIVE CONTROL AND INTERFACING (Part 3)

THE DISK CONTROLLER

Now that the details of the disk's own electronics and the intricacies of soft sectoring have been explained (Parts 1 & 2), you should be able to see what is left for the disk controller to do. Most controllers on the market today are designed around a single chip (IC) - either the 8271 or one of the series of Western Digital 179X controllers. If you need to know how one of these chips work, then there is no substitute for a data sheet, however here is a short explanation of the 1791/2 operation.

A typical circuit can be seen in the diagram below:

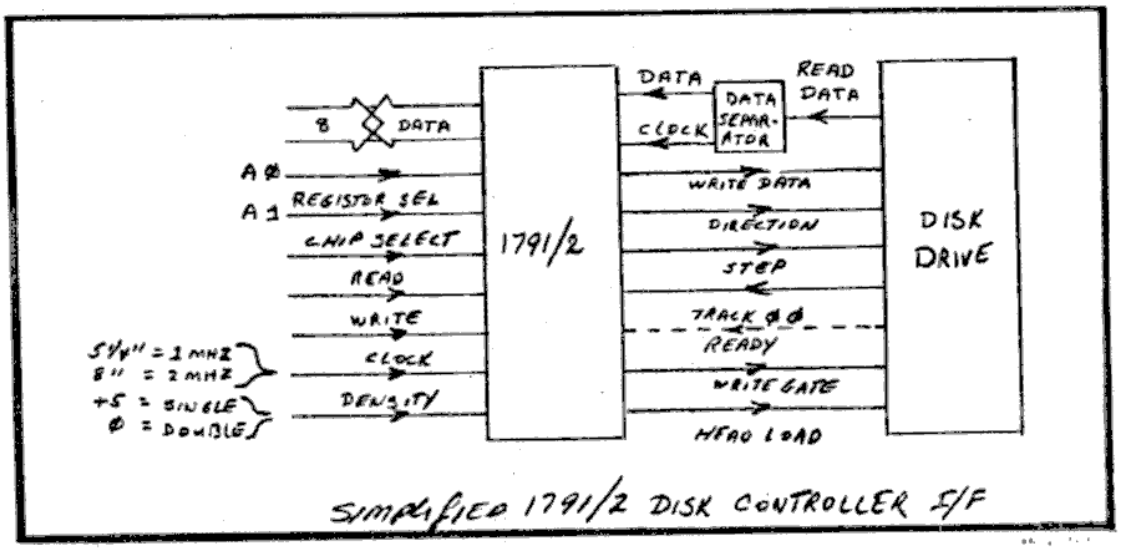

SIMPLIFIED 1791/2 DISK CONTROLLER I/F

From the software point of view the controller looks like a number of registers - command, status, track, sector and data to be precise. The command register and the status register are used by the computer to give the disk controller its instructions and to find out how they are progressing. The track and sector registers are used to hold the disk address of the sector that an instruction refers to and the data register is used to send or receive data from the disk drive.

Given a disk that is already formatted, the needed operation to write some data to a sector is straightforward. If the track register contains the number of the track that the head is currently assumed to be over, then the number of the track required is stored in the data register and a SEEK command code is stored in the command register. A SEEK command causes the disk controller to set the stepping direction and to output stepping pulses until the track register contains the same number as the data register. If any point during disk operation that the track register is found not to contain the track number then an error is reported and usually the software will issue a RESTORE command to step the head out until the track zero (T00) switch is activated. This action moves the head to track zero so that the track register can be cleared (sometimes referred to as calibration).

ALTERNATE TIMEX PORTUGAL DISK DRIVE POWER SUPPLY

As promised at the November meeting, is the schematic for an isolated + 5 volt controller source from the ASTEC AC 8151-01 switching power supply. Note that the 5 volt regulator should be installed on a heat sink as it must dissipate a minimum of 7 volts from the +12 volt leg of the switching power supply.

If the power supply is used in close proximity with the controller and disk drives, then it should be enclosed in a metal case to prevent unwanted interference due to the switching component within the power supply.

The ASTEC switcher can handle 3 five and one quarter (5 1/4) inch disk drives with ease. The added 5 volt regulator for the controller will reduce the drive capability to two drives and operate continuously without any chance of overheating.

If you have a spare electrolytic capacitor around; any value from 10 - 100 mf at 25 volts; you can add it between the +12 volt pin on SK2 and the common pin of the same connector. The controller supply will operate fine with or without the capacitor.

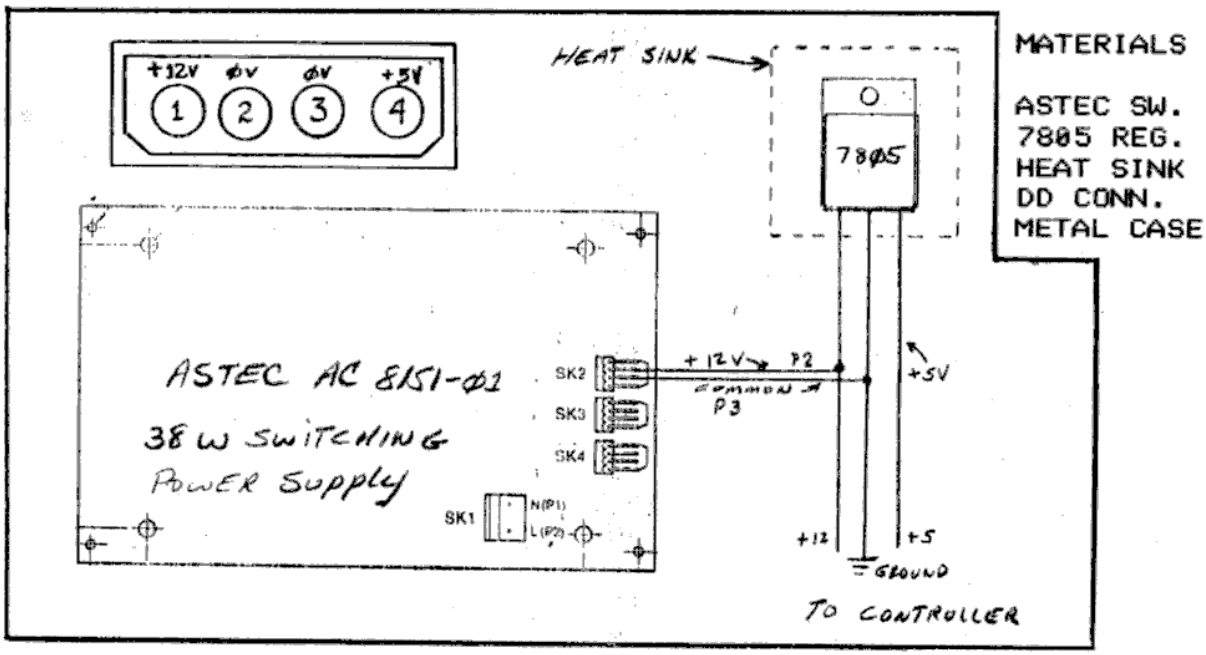

5 VOLT DC CONTROLLER SOURCE ADDITION TO THE ASTEC SWITCHER P/S

.....Bob Gilder

Once the head is positioned over the desired track, the sector register is loaded with the desired sector and a READ SECTOR command is issued. This causes the disk controller to read the ID fields as they pass under the head until one of the correct track and sector number is located. The data in the corresponding data field is read in. If an ID field with the right track and sector is not found within one revolution, an error is reported and the disk software usually issues a RESTORE command and tries a few times before giving up and reporting a disk error to the user. Writing a sector follows the same stages of head positioning and of reading ID fields to find the correct sector only; instead of reading the data in, the new data is written out to the data field.

The only remaining problem is how a disk ever gets formatted in the first place. The ID fields cannot be written using a WRITE SECTOR command because this only changes data in the data field. The answer is that the 1791/2 and most other controller chips include a READ TRACK and a WRITE TRACK command. Both of these commands ignore the sector structure of a track and simply take the index pulse as a marker for the start of a track which is either read or written in its entirety. To format a disk, the formatter simply writes the track pattern described earlier onto each track in turn using the WRITE TRACK command.

WORKING UPWARDS

We have come a long way since this series of articles first appeared in LIST, but there is still some way to go before the level of disk and program files is reached. So far, all that the disk drive and the disk controller can do for us is store and recall chunks of data in the form of sectors. The final stage in making the floppy disk useful is converting this collection of sectors into named files. This is where hardware and electronics gives way to software - the DOS or DISK OPERATING SYSTEM.

If time is on my side and positive response from the past DDC&I articles is forthcomming, I will then continue the series with an explanation of the disk drive hardware and attempt to outline the DOS structure. Please advise your LIST editor.

.....Bob Gilder

A glossary of keyswitch technologies

Electromechanical:
Two moving metal contacts touch one another in a butting action, producing the keyswitch actuation.

Capacitive:
A hinged foam pad or metal plate moves toward a plate on a pc-board substrate, generating a change in capacitance and the subsequent key actuation.

Hall-effect:
Pressing a key toggles on a solid-state Hall-effect switch in the presence of a permanent magnetic field. The switch incorporates an IC containing a Hall generator in addition to a trigger circuit and amplifier.

Ferrite-core:
Key actuation causes a single-turn transformer to couple a scanning pulse to a sensing wire. A plunger magnet saturates the switch's ferrite core in the off position to inhibit coupling.

Reed:
A permanent magnet built into the switch plunger moves into close proximity with the reed, which reacts by flexing and opening the contact.

Membrane:
A conductive switch pattern containing silver contacts is screened onto two flexible Mylar sheets, both sandwiching a spacer layer. Actuating the keyswitch causes the upper membrane layer to press downward and make contact with the lower layer.

Conductive-rubber/elastomer:
Molded silicone rubber or nonsilicone rubber elastomer domes, each containing a bonded carbon pad, contact an etched switching element on a pc board.

Table 1. Comparative Keyswitch Reliability

Technologies	Operating cycles (in millions)
Electromechanical	10-100
Capacitive	100
Hall-effect	100
Ferrite-core	100
Reed	100
Conductive-rubber/elastomer (rubber, lowest; elastomer, highest)	5-100
Membrane	10-75

****
KEYBOARD MANIA — Part 1
****
By Cedric R. Bastiaans

I. INTRODUCTION

Sir Clive, the man who brought powerful, but affordable computers to the masses (and still does, in mainland China for instance), appears not to be too pre-occupied with keyboards. Both the ZX80 and the 81 sported so-called membrane keyboards. Granted, they are inexpensive and quite reliable, but they really have no business being on a computer. They are user- UNfriendly and only belong on appliances, where the "keys" get activated only once in a while (blenders, toaster ovens and the like).
Membrane keyswitch assemblies are still around, but they have come a long way, now with full travel actuating keys. It is the membrane keyboard, which is directly activated by human fingers, that I despise. The Commodore 64 would not have enjoyed its immense worldwide popularity, if Jack Tramiel would have given it a membrane KB like the ZX81 (or TS1000).

Anyway, I think that a real, full travel keyboard (KB) is a must for any computer! It was one of the first things I did, back in 1981: put a professional KB on my ZX81. I still have it; it has 10 dedicated keys, i.e. keys that effect functions that would otherwise require the actuation of two keys simultaneously.
I know that many amongst you think that the TS2068 KB (which is not a membrane keyboard, but is not a full travel type either), is heaven compared to the KB on the ZX or TS1000. It is without a doubt a great improvement, but it still is a very inadequate KB for computers, certainly if the machine is used for word processing. Should I remind you of the so-called space bar with its annoying problems of sticking and multiple spaces or not working at all unless you hit it dead center? If you have never worked with a real KB, you just don't know how pleasurable keying on a full travel KB is. Even the QL, with its membrane KB activated by wobbly rubber blocks is far from meeting the criteria of a pro KB.
I have improved a couple of computers with pro keyboards and would like to share with you a couple of circuits I have used for dedicated keys, give some pointers on KB's in general and suggestions on improved keytops, all for the TS2068.

II. CHOICE OF KEYBOARD

The KB should be of the mechanical switch type, with full travel keys and positive action. There are many surplus or reject KB's available from a variety of sources. Make certain that you get one with straight electrical contacts, so-called single-pole,single-throw (SPST) types. There are KB's that use exotic ways of "making contact", such as the ones using capacitive or Hall-effect "switches". Not only are these expensive, but they are also very difficult to adapt to our needs.
Also, don't buy so-called ASCII-encoded KB's; the electronic circuitry on it is not needed and therefore wasted. Sometimes though, they can be had real cheap; just make sure that the keys are SPST mechanical switches and discard the electronics.
And beware of membrane KB's (even though they might be of the full travel type), because their matrix is practically always part of the flexible membrane printed circuit. Since it can not be expected that the matrix of a keyboard, not originally built for a TS computer, would be identical to the matrix we need, you should expect having to modify the printed circuit board (PCB) of the KB you acquire. This entails cutting copper traces and making new wire connections. And that is something impossible to do with the membrane circuit.
As I am writing this (Dec.15'85), Radio Shack has a special purchase item 277-1020, a 75-key KB selling for $6. It is a membrane type with very good and light-touch, full travel, beautifully sculptured keys. It has however, an incompatible matrix and it can not be easily modified. A real pity...

As far as the tactile "feel" of the KB keys goes, that is a matter of personal taste, but maybe I can give you some guidance. One of the very best KB "feels" can be experienced with the KB of the Canon Typest*r 5 electronic typewriter.

You could therefore enter a store which carries them and try one out. Who knows? Maybe you will even buy one! (I think it's a fabulous typewriter).
But since you are a member of that masochistic lot, also known as Sinclair computer addicts, and have endured pain with chintzy KB's for heaven knows how long, you probably would go "gaga" about any full travel KB!
A good source for surplus keyboards is Jameco Electronics, 1355 Shoreway Road, Belmont CA 94002; their item KB54, a 54-key KB sells for $10.
Another one is ITC, 9119 De Soto Avenue, Chatsworth CA 91311, but they have no catalog and do not accept mail orders.

III. KEYBOARD MATRIX

In the foregoing, the word "matrix" has been used several times and therefore requires explanation, in case you don't already know. The TS2068 has 42 keys, but 2 of them are in duplicate and wired in parallel, CAPS SHIFT and BREAK (or SPACE), so that a matrix of three groups of lines, one with 5 and two of 4 lines each, can be and is indeed used to enter the 40 (=5x2x4) principal key functions.
This matrix is shown in Figure 1.

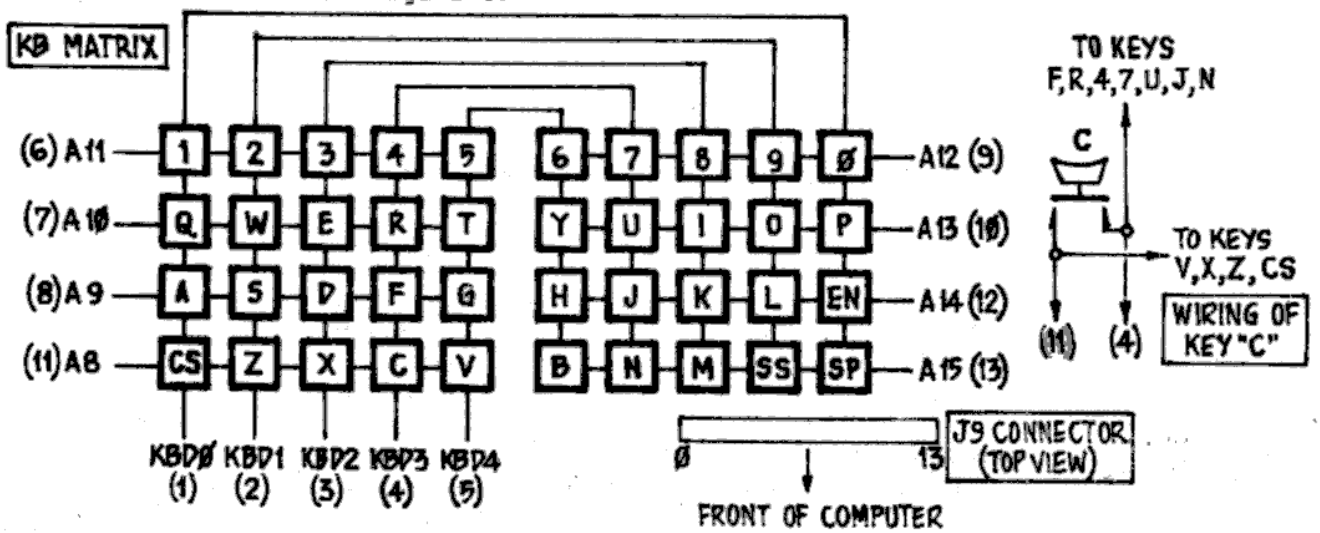

FIGURE 1

Each block depicts a key and is marked with the principal character on that key. Whenever a key is pressed, the two lines intersecting at the corresponding block become electrically connected. If you would press key "5", lines A11 and KBD4 will connect, whereas pressing "6" joins lines A12 and KBD4. This matrix will be helpful in modifying the printed matrix of any suitable surplus KB you might purchase.
Incidentally, the matrix for the ZX81/TS1000 is almost identical to the matrix shown in Fig.1; the only difference is that a "period (.)" key is in place of the Symbol Shift key, and the line numbering is different.

Since we deal with logic circuits and extremely low electrical currents, the key contact need not have the low resistance normally encountered in mechanical switches. A contact resistance of several hundreds of ohms will still generate the desired function and under certain conditions will even be beneficial, as we will see later.

The lines connect to the 14-pin KB Interface Connector J9, which is on the main PCB inside the computer. This connector has .100" pin spacing and normally mates with the flex cable of the original TS2068 KB, but the surplus KB can easily be connected with a flat cable and a connector made of headers for socket connectors, which come in strips of 36-pin size, notched for easy breaking to desired length. If you wish, you can of course unsolder and discard connector J9 altogether and solder a flat cable, much like an umbilical cord of the KB, directly to the computer's PCB.
The connector pinout is also shown in Fig.1; #0 is ground, the remaining 13 (=5+4+4) pins are the KBD and A lines and these pin numbers are also shown in parentheses near the line identifications of the matrix.

The illustration also shows how the two terminals of each key-switch should be connected to the lines.

To facilitate the choice of connections and circuits for dedicated keys, and also the check-out of matrix wiring after it has been modified, the table of Fig.2 has been composed. It shows for each principal character and function, the required connections, which are indicated as groups of pin-out numbers of J9.
Thus, if for instance the Symbol Shift key is pressed, pins (or lines) 2 and 13 should show an electrical connection, which opens up again when the key is released.

A	1+8	F	4+8	K	3+12	P	1+10	U	4+10	Z	2+11	5	5+6	0	1+9
B	5+13	G	5+8	L	2+12	Q	1+7	V	5+11	1	1+6	6	5+9	SS	2+13
C	4+11	H	5+12	M	3+13	R	4+7	W	2+7	2	2+6	7	4+9	CS	1+11
D	3+8	I	3+10	N	4+13	S	2+8	X	3+11	3	3+6	8	3+9	SP	1+13
E	3+7	J	4+12	O	2+10	T	5+7	Y	5+10	4	4+6	9	2+9	EN	1+12

Note: SS = Symbol Shift; CS = Cap Shift; SP = Space Bar; EN = ENTER

FIGURE 2

IV. DEDICATED KEYS

The question of which functions or symbols to put on dedicated keys is largely dependent on the number of extra keys available. Secondarily, it is a matter of personal taste; I have read a number of articles about keyboards with some simple dedicated keys and was always rather puzzled as to why the writers of those articles chose the functions and symbols as they did. You should really ponder this matter very seriously, but of course the more extra keys the KB has, the easier the choice is going to be. Determine which functions and symbols are used the most; they are obvious first contenders. Do keep the two Caps Shift keys, one on either side of the bottom row. I also suggest to have two Symbol Shift keys, one next to each CS key. DELETE would be my first choice for a dedicated key, then function GRAPHICS, the period (.), the comma, the colon, semi-colon, the 4 arithmetic functions with the =sign, the ?, the !, both parentheses, the quotation mark, the $-sign and the Extended Mode function.
The table of figure 3 shows suggested functions and symbols, together with the required KBD and A line junctions, again expressed in terms of the J9 pin numbers. Because they require the simultaneous actuation of either the SS or the CS keys, the required junctions each show TWO groups of connections, the first one of which is for either of these shift functions.

? 2+13/4+11	; 2+13/2+10	= 2+13/2+12	(2+13/3+9	← 1+11/5+6	ED 1+11/1+6
! 2+13/1+6	+ 2+13/3+12	↑ 2+13/5+12	) 2+13/2+9	→ 1+11/3+9	CL 1+11/2+6
. 2+13/3+13	- 2+13/4+12	" 2+13/1+10	@ 2+13/2+6	↑ 1+11/4+9	GR 1+11/2+9
, 2+13/4+13	* 2+13/5+13	' 2+13/4+9	# 2+13/3+6	↓ 1+11/5+9	DE 1+11/1+9
: 2+13/2+11	/ 2+13/5+11	$ 2+13/4+6			EM 1+11/2+13

Note: ED = EDIT; CL = CAPS LOCK; GR = GRAPHICS; DE = DELETE; EM = EXTENDED MODE

FIGURE 3

The table shows for instance that in order to create the $-symbol, pins 2 and 13 should be connected (Symbol Shift), as well as at the same time pins 4 and 6 (the "4"-key). Another example is the semicolon; this character requires that pin 2 is again to be connected to pin 13 (SS), but ALSO to pin 10 (the "0"-key).
Still another example is the multiplication or asterisk symbol *; it requires that pin 2 should connect to pin 13, which in turn should also connect to pin 5 ("8"-key).
With the help of the table Fig.2 you can of course determine the junction combinations necessary for any symbol or function not shown in the table Fig.3.

In the next installment of this article series we will discuss exactly how to effect all these connections.

BANK SWITCHING THE TIMEX/Sinclair 2068 COMPUTER

What is bank switching?

The T2068 contains a thin black rectangular chip that is the "boss"--the central processing unit (CPU). It is of the popular variety Z80A which has a long history of success. It runs just about everything, but it takes orders from you.

The boss has a filing system in which there are 65,536 places to put things--every one at his "fingertips". Each place has an address, from 0 through 65,535. To help out, all these places are chunked into eight file rooms. The rooms are called CHUNK 0 through CHUNK 7. Each contains 8,192 places.

CHUNKS 0 and 1 normally contain information you can't change. That is read-only-memory (ROM for short). What is normally in those two rooms is the HOME ROM. The other rooms are normally full of working files that can be changed, the HOME RAM.

Business goes merrily on until you tell the boss to prepare a report on tape, which requires the services of EXROM.

"Where is EXROM?" Shouts the boss.
"Across town, boss."
"Well, get it!"
"Yes, boss--er--where will I put it?"
"Hmmm--Kick HOME ROM out of CHUNK 0 and put it there."
"OK boss--suppose we need HOME ROM?"
"Then we'll get it back the same way, stupid."

The job of taping the company report is completed and HOME ROM is moved back into CHUNK 0.

Now that is what is called bank switching. Is that so hard to understand? You have a limited number of CHUNKs, but you can change what is in them.

The EXROM is one. The DOCK where you put plug-in cartridges is another. All others are called expanion bank units (EXBU). You might think that anything connected to the computer is an EXBU. Many things are just connected to the phone lines, so-to-speak...the input/output system(I/O). A buss expansion unit, a BEU, is not always an EXBU. Confused? To be an EXBU it must be able to move into a chunk. The 2040 printer can't, even if it is a BEU. EXBUs require a special chip (or its equivalent) to communicate with the bank switching controller.

Remember that stupid helper? He was the one who did the actual bank switching. If he was told to switch out the chunk he works in, how would the boss ever get him back?

There are five choices.

a. Don't kick him out.
b. Make sure the new EXBU has his replacement.
c. Use the telephone. (I/O)
d. Talk to ROM.
e. "Doubletalk" to memory.

Options a. and b. are bad. One mistake and all is lost. Option d. is bad because the chunk could have RAM switched in. That leaves options c. and e. The 2068 uses both, even though option c. would suffice. It is easy to understand using the I/O to contact the bank switching controller (BSC). It is not so easy to understand "doubletalk", so we'll explain that later.

This scenario might not have been needed by many of you, but a fresh viewpoint often causes a handslap to the forehead. From here on, we get very technical.

Now that you know what bank switching is, and some of its problems--let's review the I/O facilities of the 2068.

"Review" is not really the right word, because much of what is presented here is not in any better known books for the 2068.

To begin with, two I/O instructions will be explained--CLOSE, and OPEN. The simpler of the two is CLOSE.

In the process, it will be necessary to explain other instructions as they are met. In this way, an orderly presentation is possible.

Figure 1 shows a flow chart for the operation CLOSE. It has two main branches: one for HOME use, the other for EXBU's.

It should be mentioned here that TIMEX produced 2068s with the EXBU branch disabled because they had not yet (and never did) market EXBU devices. Through judicious use of error trapping, this branch can be healed. Lesser treatments permit adding the Microdrive, but why settle for less than complete capability?

This also resulted in unresolved "bugs" in the bank switching code which would have been fixed if tested with EXBUs. Many are as simple as the typographical error at 5610h in CALL_BANK, for which the cure is easy. The one at 0F48h in PASSIN is harder.

Ideally the ROM should be replaced, but let's be practical.

The syntax of the CLOSE statement is:

```
CLOSE # [streamname]
```

[streamname] is a numeric variable or a constant which has a rounded integer value from 0 thru 15

A mnemonic is preferred because it makes more sense and can be reassigned without rewriting program subroutines.

The integer value will be called STRM# hereafter.

The first block in Fig 1 is CALL OFFSET. OFFSET uses STRM# to compute an Index into a table of offsets called STRMD. It gets two bytes in Z80 reg BC and returns with reg HL pointing there.

The 36 byte STRMD table is located in the System variables area @ 23568. Initially the table contains:

STRM#	ADDRESS	(C)	BYTES	(B)	(INPUT)	NORMAL USE	(OUTPUT)
-3	23568	1		0	KEYBOARD		LOWER SCREEN
-2	23570	6		0	(ERROR)		MAIN SCREEN
-1	23572	11		0	(ERROR)		RAM WRITE
0	23574	1		0	(KEYBOARD)		LOWER SCREEN
1	23576	1		0	INPUT COMMAND		LOWER SCREEN
2	23578	6		0	(ERROR)		PRINT/LIST
3	23580	16		0	(ERROR)		LPRINT/LLIST
4	23582	0		0	(USER DEFINED, INITIALLY CLOSED.)		
..	.....	"		"	"		
16	23604	"		"	"		

STRM#s -3, -2 and -1 are "hidden" from access by BASIC. All the others can be changed to suit your own purposes. The reason for hiding them is to insure the computer is not denied access to the keyboard, space for reports, nor space for autolisting.

The normal use is not sacred, but you should rarely need to use more than the 12 available assignable streams from 4 to 16.

Channels are real data paths between one computer section and another. They might be temporary, permanent, near, or far--but they are real.

Streams are arbitrary labels applied to channels as a convenience. They are not real--any more than the printed word is the real sound as spoken. They are, however, very convenient.

Now comes an interesting piece of information. The true offset is the lower 16 bits of reg BC. Bit 7 of reg B is a flag which indicates an EXBU is involved, when set.

For EXBU streams, the offset is an index into the system configuration table(SYSCON).

For HOME streams, the offset minus one is used as an index into the CHANS table:

CHANS TABLE (INITIALLY)

CHAN#	ADDRESS	SUBADDR	VALUE	FUNCTION
1	25688	25688	1260	SENDTV (OUTPUT)
		25690	3086	IN_K (INPUT)
		25692	"K"	DEVICE SPEC.
2	25693	25693	1260	SENDTV (OUTPUT)
		25695	4543	ERROR
		25697	"S"	DEVICE SPEC.
3	25698	25698	2791	INSA (OUTPUT)
		25700	4543	ERROR
		25702	"R"	DEVICE SPEC.
4	25703	25703	1260	SENDTV (OUTPUT)
		25705	4543	ERROR
		25707	"P"	DEVICE SPEC.
ETB	25708	25708	80h	End-of-table marker
		25709	00h	Bogey byte
...	25710	Start of BASIC area		

Notice that channels 2 and 4 differ only in the device spec. Even though SENDTV is listed for 3 of the 4 channels, its operation depends on flags defined by the device specifications.

One of the required functions of CLOSE is to reset any device dependent flags which could interfere with subsequent operation. An example of this is a table used to map the interrupt daisy chain for open devices.

That is why the CLOSE routine must look up the offset, read the device specification, and execute any device dependent closing routines needed.

Having done that, it is time to rewrite the STRMS offset bytes. The RSTSTR routine writes 0's for STRM# 4 thru 15. Otherwise it looks up the default values in the SMINIT table. This is the same table which was used to initialize STRMS.

Whew! The job is done.

"NOT SO FAST THERE, BUSTER!" Comes a cry from the 2068 as its screen goes crazy.

A problem exists. It seems like one of those mistakes that can ruin the end of an otherwise perfect day, but let's keep cool.

It's like this. After taking great pains to make sure that CLOSE can execute device dependent close routines if needed, the CL_TAB table is unable to point to any but one @ 5133 that does nothing at all--and then only if the device spec. is K, S, or P. Attempting to CLOSE a different device results in chaos.

It is pointless to continue until this is dealt with. This one is a "stinker". ON ERR GO TO doesn't work because no error is detected!

SEARCH is called with the address of CL_TAB in reg HL and the

UNCLASSIFIED AD

Printer Package $60. Includes Gavilan, cables, Interface card and software, Contact J. Bell - 99 Clover Hill Drive, Stamford, Ct. 06902. Package deal only.

device spec. character in reg C. It looks at the first byte in the table. If it is 0, it signifies the end of the table. It can never be the first byte. If it matches the character in C, it returns with HL pointing to the following byte and condition code CY set. If it doesn't match, it skips a byte and starts over again. Eventually it finds the end-of-table 0, providing a match has not been found first. It returns with HL pointing at the 0 and with condition code Z...but CL_TAB has no 0!

What happens when a device character is not found, is that the SEARCH routine keeps going; overrunning CL_TAB into OFFSET in search of a match or a 0. It sees an "S" @ 5143, an "O" @ 5153, and finally a 0 @ 5155. If our new device character is not "S", nor "O", SEARCH will return with HL=5155 and condition Z set. CLHOME fails to test the results of the search. It adds HL and the byte pointed to by HL. Then it jumps to that location. In the case of K, S and P, that location is 5133. No problem. The jump to 5155 is wild! It is in the middle of OFFSET, and also in the middle of an instruction.

Though the instructions are all wrong, nothing really damaging happens until the RET instruction is found @ 5161.

The intended return path @ 5133 POPs HL before RETURNing. The wild branch doesn't. As a result it "returns" to the address in HL (left on the stack), which points to the STRMS offset bytes. There is no machine code there, just offsets...EUREKA! Bright flashing lights! Suppose we sacrifice two STRM#'s so we can put in a real jump instruction to the emergency ward? Might work!

To save a long explanation, it does work, with the limitations that STRM#s 11 and 12 are sacrificed and 13 to 16 used for EXBU.

```
POKE 23595,0
POKE 23597,195
POKE 23598,Least significant byte of patch routine address.
POKE 23599,Most significant byte of same.
```

Of course we have traded one problem for another, but isn't it worth it? There are other patches needed to complete the fix, but we'll wait until we meet them.

We were discussing CLOSE. Though HOME operations have been covered in detail, the EXBU branch has only been touched. In the next installment, OPEN and the EXBU branches will come under scrutiny. We will also reveal the SECRET of why address lines A13 thru A15 are the only ones buffered.

STAY TUNED FOR THE NEXT THRILLING EPISODE.

CL_TAB with overrun

5127	75	"K"	5
5129	83	"S"	3
5131	80	"P"	1

DDCL1 "Do nothing routine"

5133	225		201

OFFSET

5135	205		30
5138	31		50
5139	203		92
5141	56	"8"	2
5145	207		23
5147	195		3
5149	7		33
5151	16		92
5153	79	"O"	6
5155	0	"End-of-table."	

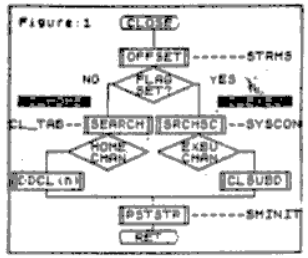

ASSEMBLER LISTING

```
4970          INC HL        |Skip offset byte
4971  SEARCH  LD A,(HL)     |Get byte
4972          AND A         |Set condition code
4973          RET Z         |Not found, end-of-table
4974          CP C          |Match?
4975          INC HL        |Point to offset
4976          JR NZ,-6      |4972 No match, try next
4978          SCF           |Here if found\Set CY
4979          RET           |Found
```

```
CLOSE    CALL OFFSET      |5135 Returns HL->offset,BC
         LD A,B
         OR C
         RET Z            |Return if already closed
         CALL CLCHAN      |5054
RSTSTR   LD BC,0          |RESTORE STRMS entry as closed
         LD DE,41964
         EX DE,HL
         ADD HL,DE
         JR C,+9          |5049 If STRM# > 0
         LD BC,4559       |Here if STRM# = -3 thru +3
         ADD HL,BC
         LD C,(HL)
         INC HL
         LD B,(HL)
         EX DE,HL
         LD (HL),C
         INC HL
         LD (HL),B
         RET
CLCHAN   PUSH HL
         LD A,B           |Get flag byte
         CP 128           |Is bit 7 set?
         JR NC,+22        |5099 CLEXBU if set
CLHOME   LD HL,(CHANS)    |23631 Here if HOME channel
         ADD HL,BC        |Compute target chan CHR# addr
         INC HL
         INC HL
         INC HL
         LD C,(HL)        |Get device CHR# from CHANS
         EX DE,HL
         LD HL,CL_TAB     |5127
         CALL SEARCH      |4971
         LD C,(HL)        |Get pointer offset
         LD B,0
         ADD HL,BC        |=5133 if found, 5155 if not
         JP (HL)          |Device dependent close routine
CLEXBU   SUB 128          |Reset bit 7
         LD B,A
         LD HL,(SYSCON)   |23740
         ADD HL,BC        |Compute addr of SYSCON group
         LD A,(HL)        |Get status byte
         CP 0
         RET Z            |Return if already closed
         CP 128
         RET Z            |Return if SYSCON end-of-table
         INC HL
         LD B,(HL)        |Get BANK#
         INC HL
         INC HL
         INC HL
         INC HL
         LD E,(HL)
         INC HL
         LD D,(HL)        |Get target addr CLSUBD
         LD H,D
         LD L,E
         LD A,(STRMNM)    |23755 Get target STRM#
         LD D,A
         LD E,0
         PUSH DE          |Parameter=Target STRM#
         PUSH HL          |Target routine addr
         PUSH BC          |BANK#,MEMSEL (=xxxx*100)
         LD BC,2
         PUSH BC          |Parameter bytes passed
         LD BC,0
         PUSH BC          |Parameter bytes returned
         CALL CALL_BANK   |26064 EXBU chan close routine
         POP HL
         RET              |to RSTSTR
SYSCON table status byte is set to 0 if it was open.
CL_TAB   4Bh              |="K"
         05h
         53h              |="S"
         03h
         50h              |="P"
         01h
DDCL1    POP HL           |Here if permanent channel
         RET              |to RSTSTR
OFFSET   CALL FIX_U1      |7956 Get STRM# from calc stack
         LD (STRMNM),A    |23755 Save it
         CP 16            |Max STRM#
         JR C,+4          |5147
         RST 8
         17h              |Error O:Invalid stream
         ADD A,3          |Add 3 to STRM#
         RLCA             |Multiply A by 2
         LD HL,STRMS      |23566
         LD C,A
         LD B,0
         ADD HL,BC        |Compute addr in STRMS
         LD C,(HL)        |Get lsb of offset
         INC HL
         LD B,(HL)        |Get msb of offset and EXBU flag
         DEC HL
         RET              |Returns HL->offset,BC
```

LONG ISLAND GROUP
Sinclair
TIMEX

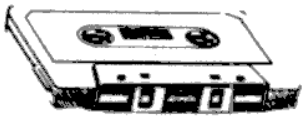

TURBO LOADERS

Perhaps one of the best ways to circumvent the ease with which a hacker can BREAK into your programs, is the use of the so-called "turbo" or "hyper" loader. Turbo loaders are machine code routines which change the way in which your computer reads tapes. Most are simply modified versions of the LOAD routine from ROM(or EXROM) with the speed parameters changed. If you have some of the newer Spectrum software, you may already have seen a turbo-loading program.

Turbo-load programs begin with a short BASIC loader, as usual. However, the difference between this mode and normal LOADing then becomes immediately apparent. Instead of the normal loading of a SCREEN$ file, either a short bytes-file containing the turbo load routine or, if that routine has been hidden in the BASIC variables, the first section of the program will load. You will probably note that the border patterns associated with this load are different than the normal one. If for example, the normal Sinclair routine was simply speeded up, the yellow and blue stripes appear narrower. If one were to listen to the sound of the tape, (s)he would hear a higher pitched tone sequence than normal. Again, this is due to the higher baud rate being used.

While we normally try to give simple concrete examples of how to implement the protection schemes we're discussing, re-writting the tape routines is a subject which almost requires a book in itself, if it is to be done right. Further, I haven't actually done it myself yet and don't much approve of the practice, for reasons discussed below. For those wishing to pursue the subject further though, the following guidance should prove useful;

1. The tape handling routines can be found in the Spectrum between 04C2(hex) and about 09F0(h). The main entry is at 0605.

2. Speeding up the LOADing and SAVEing process involves reducing the time delays in the 'SA-BYTES' and 'LD-BYTES' routines. These are established by setting values in the BC register pair in 8 different locations. Some of these are:

Location	Normal	2X speed	
0519	42 or 43	1B	SAVE
051F	3E	16	SAVE
052C	31	09	SAVE
etc	B0	E1	
"	B2	E3	LOAD
05CF	CB	EC	LOAD
	B0	E1	LOAD

etc. (See Logan and O'Hara,"Complete Spectrum ROM Disassembly")

3. You must relocate the ROM routines to an area in RAM. All absolute adresses in the routines must be replaced with new values, which reflect the offset from their original location. Remember, on the TS2068, the routines are in EXROM. It will probably prove simpler to just use a modified version of the

Spectrum routines in either case.

4. Only save the LOAD part of your new tape handling routines with your program. This might make it a little tougher for hackers to use. The really sophisticated ones, of course, will already have produced simple "compare bytes" programs, which will look for three or four key bytes of the Sinclair Load routines, and you would then have to actually write your own tape subroutines to be more secure. The "compare bytes" logic is so simple, unfortuneately, that it can be written in BASIC. The hacker need only select three bytes of the original code, e.g. the three bytes which normally come before 052C, and search your BASIC loader for them, in order to find a reference point in your hyper loader.

To find, for example, the series of bytes for the code:

Mnemonics which is	Hex	or	Decimal
Ld b,1	06,01		6,1
dec de	1B		27
ret	C9		201

A simple BASIC program would be:

```
10 Clear 31999: LOAD "" CODE 32000,32000
20 FOR i=32000 to 64000
30 IF PEEK i=6 and PEEK i+1=1 and PEEK i+2=27 and
PEEK i+3=201 THEN PRINT "Try the code at ";i
40 NEXT i
```

5. The easiest way to generate a "turbo" is to use the machine code program which appears in the May 1984 issue of Your Computer Magazine on page 119. Paul Rhodes article, entitled "Qiuckload", tells you how to achieve speed increases of up to 2.5 times normal, as well as how to slow down a save for even greater reliability. Some of his material is included here. His program is some 1872 bytes of POKEd-in MC.

6. Consider removing the checks for BREAK key pressed, which are in the Timex code. Better yet, add a routine of your own which causes a spectacular crash, if the break key is pressed.

If you have successfully implemented your own hyperloader, only the really dedicated hacker, with access to a disassembler, will be able to "crack" your code. As a bonus, the higher frequencies involved, make it more difficult to copy your program tape-to-tape, so even hardware copies may not work.

That's not all that may not work, however. It is entirely possible that your new "hyper" tapes may not load, at all, on many users machines. Not only will this frustrate, and possibly discourage customers, but there is a significant potential for excessive service calls and complaints. Either situation is potentially fatal, particularly in the current TS market. Of course, as mentioned in our review of Interface Three, last month, there is no defence against a purely hardware oriented "breaker".

In our next installment, we'll take a look at "headerless files", another way to confuse the unwary.

© COPYRIGHT 1986 P. DONNELLY

HACKERS NOTEBOOK...

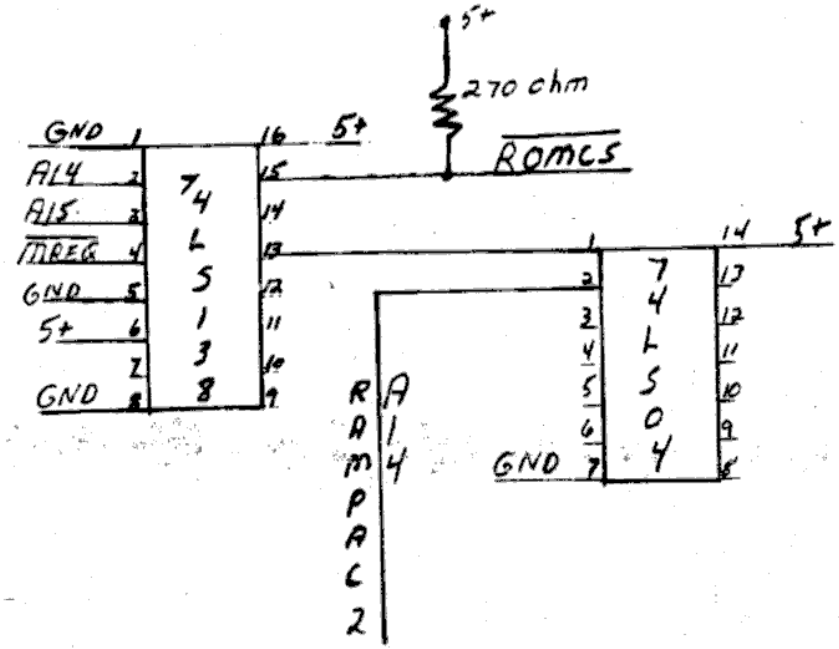

THIS CIRCUIT WILL ENABLE A SECOND 16K TIMEX RAMPAC FOR 32K OF **BASIC PROGRAM RAM.** FIRST YOU NEED SOME WAY OF SPLITTING THE EDGE CONNECTOR SO THAT YOU HAVE TWO PLACES TWO PLUG ON THE RAMPAC'S AND A THIRD FOR A THROUGH CONNECTOR. RAMPAC ONE (16 TO 32K) WILL CONNECT AS NORMAL WITH NO INTERUPTION TO IT'S SIGNALS. RAMPAC TWO (32 TO 48K) WILL HAVE ALL IT'S NORMAL CONNECTION'S EXCEPT THE **A14** LINE. **THE** OUTPUT FROM PIN TWO OF THE 74LS04 IS SUBSTITUTED FOR THE **A14** LINE TO THE SECOND **RAMPAC.** AS WIRED ABOVE, THE 74LS138 WILL DECODE ADDRESSES IN **16K CHUNKS.** THE OUTPUT FROM PIN 15 IS FOR ROM DECODING. IF YOU HAVE ANOTHER BOARD IN USE THAT DECODES THE ROM **THIS CONNECTION** IS NOT NECESSARY. THE 74LS04 IS A HEX INVERTER **TO** CHANGE THE ACTIVE LOW SIGNAL FROM THE 74LS138 TO ACTIVE HIGH. **THE** TIMEX RAMPAC'S DRAW ALOT OF CURRENT, SO DEPENDING ON HOW MANY BOARDS YOU HAVE PLUGGED IN, YOU MAY CONSIDER PROVIDING **A SEPERATE** POWER SUPPLY (+5 & +9). THE MOD WORKS FINE ON A BARE **T/S 1000.**

TS 1000 Memory Expansion - D. Dailey

ZX Printer & the 2068 - W. Pedersen

THE ZX PRINTER AND THE TS2068

How many of you have a ZX PRINTER you discovered would not work with the TS2068? Frustrating, isn't it?

The cause of the incompatibility is very simple. Unregulated DC power is provided on pin 2B at the rear of the ZX81. The corresponding pin 5B at the rear of the TS2068 is isolated.

The ZX PRINTER uses this power to run a voltage boosting oscillator regulator to get the 35 vdc or so needed for the stylus. It accommodates a wide range of voltage, actually having to work harder as the voltage decreases. The motor and motor switching circuits also use this power. The ZX PRINTER gets 9vdc from the ZX81/TS1000. The TS2068 could supply 15vdc if connected.

The printer seems to work fine (and a little faster), when it is hooked up this way. Then again, some marginal parts might be damaged. There are better ways.

Remember the heavy duty power supply that came with your new ZX PRINTER? Well, don't throw it away. You have need of it.

Fig.1 shows how your modified ZX PRINTER will look.

Fig.2 shows the wiring for the modified printer.

Carefully remove the two screws that hold the connector cover in place. Do NOT disassemble the printer! Remove the cover. Locate pads 2B,4B-5B, and 7A. The upper side is A, the lower B, as installed. Numbers start with 1 at the left near the key. The key is position 3.

Using about six inches of AWG 22 insulated wire, solder one to pad 2B and the other to 4B-5B, being careful not to disturb the wires already there. Lay these wires along the existing cable, and being careful not to clamp the new wires, replace the cover. Now connect the other ends of the wires to a miniature cable jack. (Make sure it fits your power supply.) The wire from 2B goes to the tip (+). The other goes to the shell (gnd). The rework is complete, but check the connections before using it.

What about pad 7A? Putting a switch in the wire from this pad lets you fool the computer into thinking the printer isn't home. A small utility box can be used in place of the cable jack shell if you wish to add this feature as well.

Is it really worth doing? Even if you also own a TS2040, what about what happens to thermal paper when you lay it on top of a hot power supply or try to read it a year later? Why not have the best of both worlds? Use the ZX for permanent records, and the more economical TS2040 for mundane purposes. It's not hard to change printers if you remember to SAVE before turning the power off, and then reLOADing.

Graphics are not stretched nearly as much on the ZX PRINTER.

Dig out that old ZX PRINTER!

Fig. 1

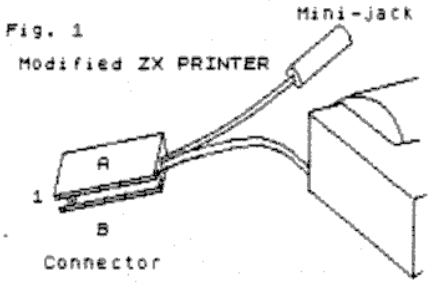

Fig. 2

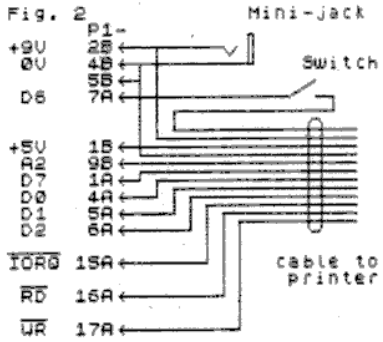

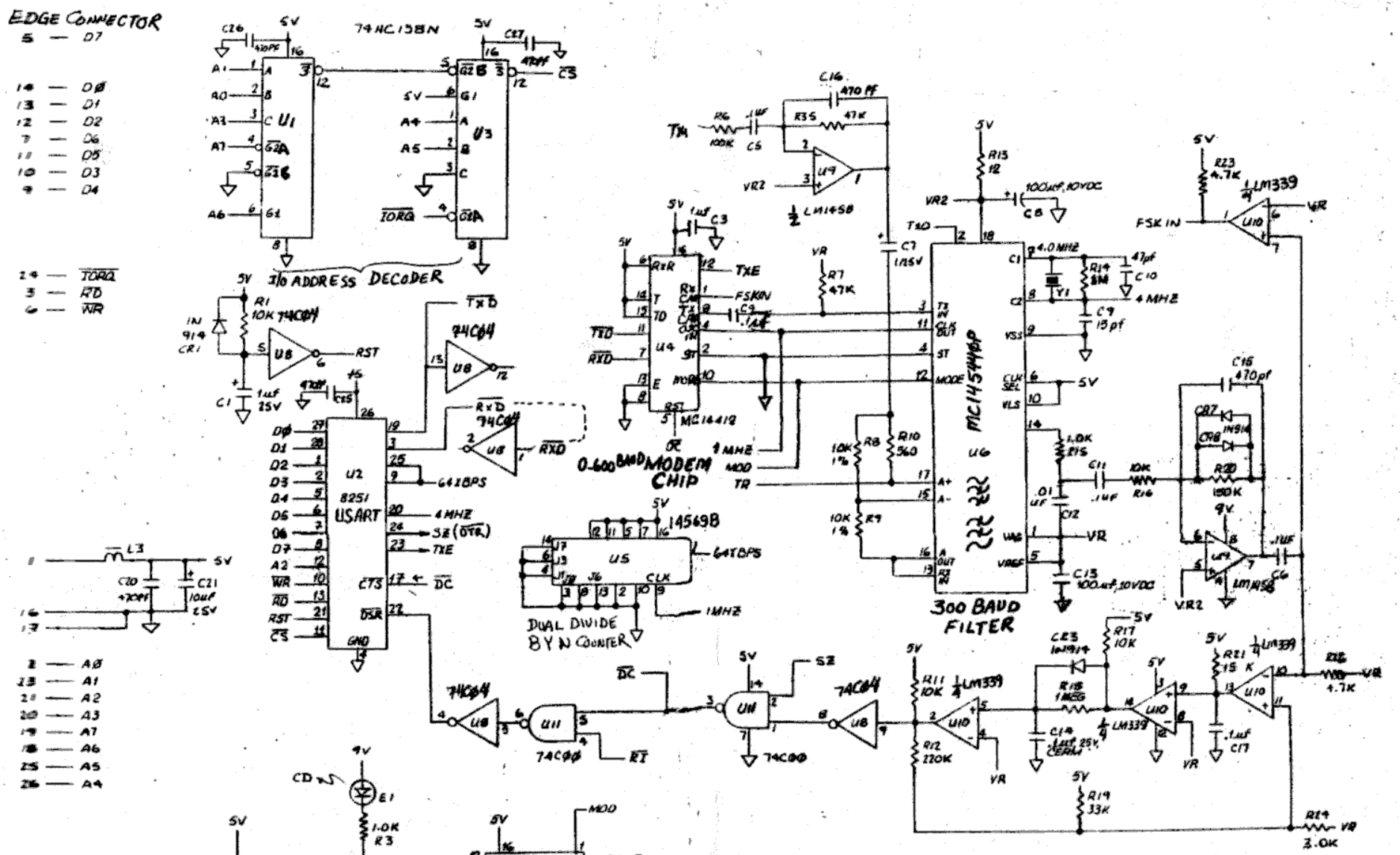

TIMEX 2050 MODEM

(WITHOUT RELAY CIRCUITRY)

LIST

FOR YOUR INFORMATION ---

By N.A. PASHTOON

Here are some best buys. The ODD LOTS stores are selling all Atari, etc. games two for $1.00. Buy STAR RAIDERS. For $0.50 you get a 12 switch keypad, with an 8 wire cable with a DB-9 female plug. The cable is ideal is ideal for RGB, RS232 etc. The game cartridge is a perfect small project box(printer interface) for attachment to the TS2068 bus.

The other BEST BUY is the COMPLETE TS2050 modem board from Zebra Systems. Single quantity $10.00, 3 for $25.00, 10 for $70.00.Even though these are sold as is , a statistical check by Cem B. revealed that 5 out of 6 were in perfect working condition. The bad one had a very minor problem which was visually discovered & repaired. Another two members, who bought two in the Jan. meeting, had both perfectly working boards. LIST will probably publish project(s) related to the modem board in the future.

On P.22, a circuit diagram of the TS2050 Modem is reproduced for your reference file. The diagram was supplied to LIST by an anonymous West Coast benefactor of LIST, who probably has supplied LIST with other info. in the past. So thanks guy (or gal) , whoever you are! probably

The circuit diagram explains why users have reported having a problem connecting the modem to Interface 1- microdrive combination(Steve Ishii, LIST Sept. '85). The reason is the port addresses utilized by the modem, namely, 73H,and 77H. Both addresses have zero bits in the lower nybble of the address, which is in conflict with the incomplete addressing scheme of the Spectrum. A solution seems to be possible.

Oh Yes! In the Jan. '86 issue of CATS, LIST and SINCUS are a tie and win Mark Fisher's ad-hoc award for having the "most heavy-duty information". Thanks Mark.(What do we win?). Also LIST is cited and wins the award for being in the "least legible" cateogory for printing 80% reduction of readers letters.(Shucks , can't win 'em all.)

LISTing Policy:

Annual Dues.....$15.00 Issue Price $1.50 (includes P&P) - Double Issues $3.00

One "Sample" copy sent upon receipt of large SASE.

Copies provided on exchange basis with other bona fide user groups.

L.I.S.T.ing is published monthly by LIST (Long Island Sinclair Timex) Group, a non-for-profit users group.

NOTE: PARTIAL YEAR MEMBERSHIPS AVAILABLE

Normal membership year is Feb. through Jan. at cost of $15.00 (US) By keeping as many members as possible on that basis, we keep our costs and chances of error down.

If you wish to begin subscribing later in the year, please sign up for the end of this year and all of next.

We will accept partial years or different subscription runs, on a limited basis (particularly from members outside the U.S.) But, please be aware that, in addition to possible rate increases, your "account" must be handled "by hand" and errors may occur. International (ex Canada) subscribers will receive as many issues as we can afford to mail

All are equal in alcohol content.

12 oz. 5 oz. 1½oz.

Beer: 4.8% by volume; Wine: 11% by volume; Liquor: 80 proof or 40% by volume.

A public service bulletin from Joseph E. Seagram & Sons, Inc.

POLICY OF CONTRIBUTED MATERIAL:

We are always looking for interesting articles, programs, reviews etc., to keep our members informed and entertained. Articles submitted for publishing are printed on the following basis.

1) You, the writer, maintain the full copyright and can resell, lend or give away your work, as you wish.

2) We are granted the right to publish your material, in the original issue in which it appears. Reprints (e.g., to supply orders for back issues) will include your material as a part of its original issue. We are not allowed to sell your material in any other way, without your express written consent.

We can't (for now) pay you for your material, but you will receive a copy of the issue in which it is published, even if you're not a member. You may get more than one issue and you will definitely earn the respect and appreciation by your grateful peers.

@Copyright 1986, LIST Group. No portion of this publication may be reproduced, in any form, without the express written consent of LIST or the original author.

Articles represent the opinion of the author and not necessarily the LIST Group. LIST disclaims any responsibility for anything you may do to your computer as a result of reading any article in LIST.ing.

Please note our new address - PO BOX 438, Centerport, N.Y. 11721-0438 Mail sent to the old address must be forwarded there and will take longer to reach us.

LIST

Finally , you may have noticed that Paul Donnelly, the Founder of LIST, editor and a heavy contributor to our Newsletter, is stepping down. I believe I am reflecting the feeling of all LISTers, in thanking him for doing a wonderful job. Best Wishes to all the new officers, especially to Izzi, the new editor.

Long Island
Sinclair Times
Group
Huntington, NY
Library

2 PM

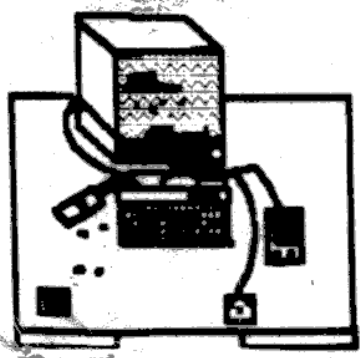

Huntington Public
LIBRARY

February Meeting

Huntington Public Library
RT 25A Main Street
Huntington, N.Y.

February 9 , 1986 (Sunday)

at 2:PM

L.I.E. or N.S.P. to Rt 110 N.
Follow 110 accross RT 25 to RT 25A
Go left on 25A. Library is 4 blocks
down on the left.

LIST
P.O. BOX 438
CENTERPORT, N.Y. 11721-0438

TO:

This Could Be Your Last Issue!